Digital storage oscilloscope
PM3315(U)

Service Manual

9499 445 02811
850115

MAT 1667

PHILIPS

PHILIPS

Digital storage oscilloscope
PM3315(U)

Service Manual

9499 445 02811
850115

WARNING! **These servicing instructions are use by qualified personal only. To avoid electric shock, do not perform any servicing other than that contained in the operating instructions unless you are qualified to do so.**

PHILIPS

PHILIPS

IMPORTANT

In correspondence concerning this instrument, please quote the type number and serial number as given on the type plate.

NOTE: *The design of this instrument is subject to continuous development and improvement. Consequently, this instrument may incorporate minor changes in detail from the information contained in this manual.*

© N.V. PHILIPS' GLOEILAMPENFABRIEKEN - EINDHOVEN - THE NETHERLANDS - 1985

PRINTED IN THE NETHERLANDS

Operating Manual PM3315(U)

Ordering number:
9499 440 26101

Tab 1. Operating Manual

Tab 2. Bedienungsanleitung

Tab 3. Notice d'Emploi

PM3325 I.E.C. Bus Operating Manual

Service Manual PM3315(U)

Tab 4. Service Manual

Tab 5. Modifications

Tab 6. Circuit Descriptions

Tab 7. Dismantling the Instrument

Tab 8. Checking and Adjusting

Tab 9. Corrective Maintenance

Tab 10. Introduction to Microprocessors

Tab 11. Explanation of used Symbols

Tab 12. Parts Lists

Additional Diagrams

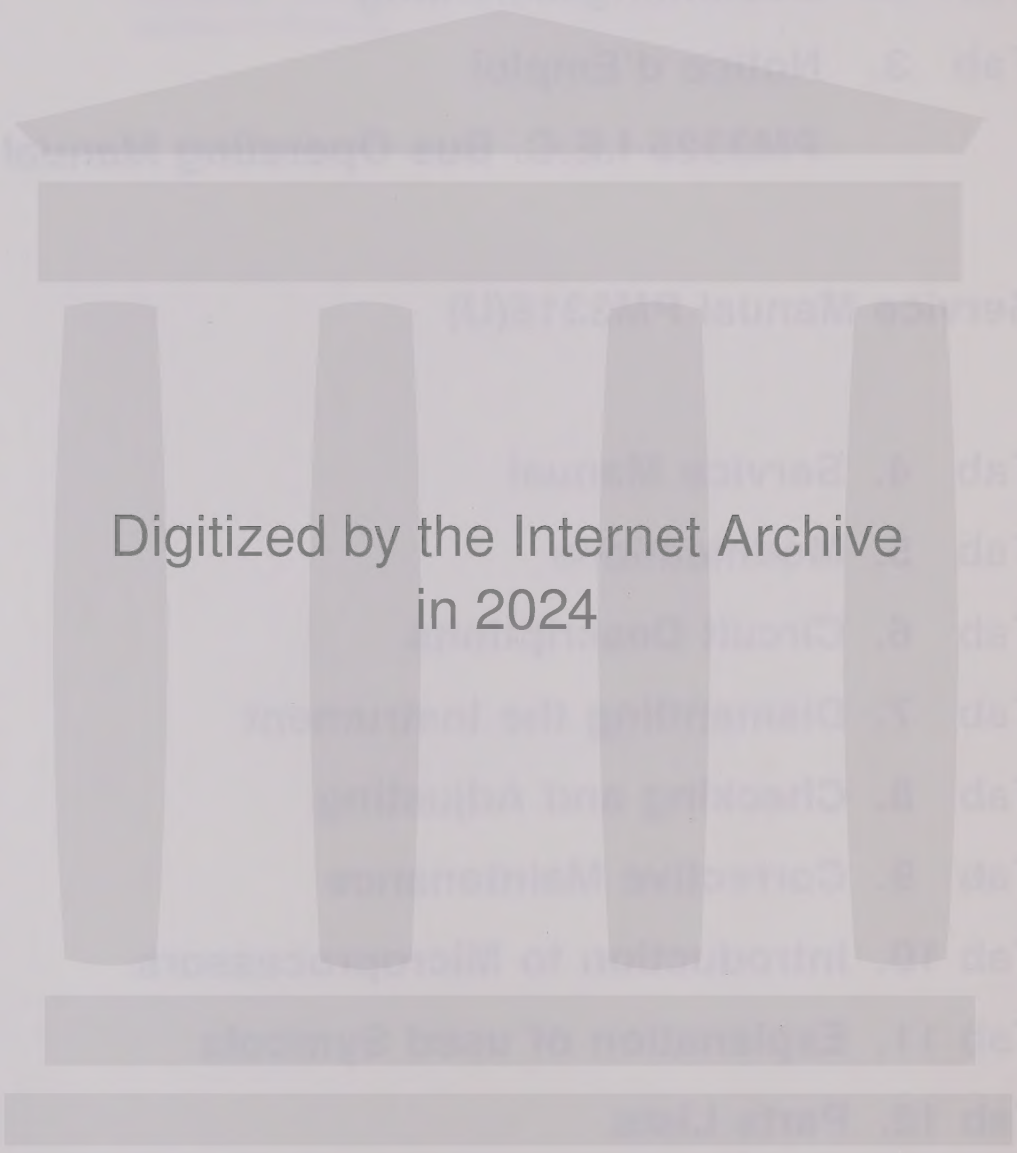

Digitized by the Internet Archive
in 2024

https://archive.org/details/manualsplus_01287

4. GENERAL INFORMATION

4.1. INTRODUCTION

The PM 3315 Digital Storage Oscilloscope is a portable, two-channel 60 MHz measuring instrument featuring micro-processor controlled electronic circuits.

A compact ergonomic design facilitates the extensive measuring capabilities of the instrument.
The versatile circuit arrangement combined with the software of the micro-processor gives a wide range of facilities, including:

- Brilliant display.
- Pre-trigger view.
- Storage of two channels with four different "event" signals per channel.
- IEC-bus built-in including remote control function for all front panel switches.
- Plotter output.
- Trigger delay.
- Battery powered memory back-up.

Furthermore, a large 8 cm x 10 cm screen with illuminated graticule lines provides for easier viewing, a 10 kV accelerating potential giving a high-intensity trace with a well-defined spot.
The oscilloscope is provided with numerous integrated circuits, which ensure stable operation and reduce the number of adjusting points.

The supply voltage can be set to one of two ranges: 100 ... 120 V ± 10 % or 220 ... 240 V ± 10 %.
As a result of the features listed above, the oscilloscope is suitable for a wide range of applications, for example the measurement and observation of:

- Rise-time (gives brilliant display intensity).
- Fast signals with a very low repetition rate.
- Very low frequency signals (up to 1 hour per division).

Fig. 4.1. Digital storage oscilloscope PM 3315

4.2 CHARACTERISTICS

This instrument has been designed and tested in accordance with IEC Publication 348 for Class 1 instruments and UL 1244 and has been supplied in a safe condition. The present Instruction Manual contains information and warnings that shall be followed by the purchaser to ensure safe operation and to retain the instrument in a safe condition.

- This specification is valid after the instrument has warmed up for 30 minutes (reference temperature 23 °C).
- Properties expressed in numerical values with tolerance stated, are guaranteed by the manufacturer. Numerical values without tolerances are typical and represent the characteristics of an average instrument.
- Inaccuracies (absolute or in %) relate to the indicated reference value.

Designation	*Specification*	*Additional information*
C.R.T.		
Cathode ray tube	D14 - 292 GH/39	
Accelerating voltage	10 kV	
Screen size	8 x 10 cm	Metal backed
Phosphor type	P31 (GH)	
Graticule	Internal	With centimeter divisions and 2 mm subdivisions along the central vertical axis shorter 2 mm divisions along the second, fourth, sixth and eight horizontal axis.
Graticule illumination	Clearly visible under normal light conditions and continuously variable	
Trace rotation	Front panel screwdriver adjustment	
Focus	Adjusted automatically	
Input vertical		
Frequency range	d.c. 0 ... 60 MHz a.c. 10 Hz ... 60 MHz	
Rise-time	< 6 ns	
Pulse aberrations	± 3 %	Measured in Y-expand with a test pulse of 8 div; rise-time 1 ns; frequency 1 MHz (except first 0.2 cm measured from mid pulse)
Vertical deflection		
Defl. coeff.	10 mV/div ... 50 V/div	12 Calibrated positions in 1-2-5 sequence
Error limit	± 3 %	±5 % in Y - expand
Continuous control range	1 : > 2.5	
Input impedance	1 MΩ // 25 pF	
Coupling	a.c. - 0 - d.c.	
⚠ Max. safe input voltage	400V	d.c. + a.c. peak
Input selection	A only B only Add A and B	Channel B can be inverted

C.M.R.R.	100 : 1	At 2 MHz max. common mode signal 8 div.
Dynamic range	2x voltage range	
DC offset	± 4x voltage range	
Max. sample rate	125MHz	
Visible signal delay	> 10 ns	See also "delay"
RMS noise	< 0.75% off full scale	
Time-base		
Time coefficients		
Repetitive only	5 ns ... 0.1 µs/div	
Direct	0.2 µs ... 0.2 s/div	
Roll	0.5 s ... 60 min/div	
Coefficient error	< 2 %	4% combined with delay in "REPETITIVE ONLY"
Resolution	25 samples/div	
Triggering		
Source	A B EXT EXT : 10 Line	
Sensitivity		
Internal	0.3 div 0.15 div	at 60 MHz at 40 MHz
External	0.3 V 0.15 V	at 60 MHz at 40 MHz
Ext : 10	3 V 1.5 V	at 60 MHz at 40 MHz
Slope	+/–	
Modes	Auto d.c. a.c. TV-frame (1/1 picture)	20 Hz ... 60 MHz dc ... 60 MHz 10 Hz ... 60 MHz Acc. to CCIR (625 lines)
Level		
Auto	Proportional to peak-to-peak value of trigger signal	
a.c./d.c.	± 3 div	
Delay		
Range	–9 ... +9999 div 0 ... 100 div	0.2 s ... 0.5 µs/div 0.2 µs ... 5 ns/div
Accuracy	±2 mm or 0.01 % ±2 div + visible delay	0.2 s ... 0.5 µs/div 0.2 µs ... 5 ns/div
Input impedance	1 MΩ // 25 pF	
⚠ Max. safe input voltage	400V	dc + ac peak

Memory

Number of memories	4	1 accumulator memory and 3 store memories
Resolution horizontal	1 : 250	In single trace mode
Resolution vertical	1 : 250	

Operation modes

Single	Refreshment of accumulator mem. takes place, when trigger level is reached and time set with trigger delay has been passed. Signal is stored according to position of trigger delay. During waiting time accumulator, is displayed and LED "NOT TRIG'D" lights up.	0.2 µs ... 0.2 s/div
Recurrent	Signal in accumulator memory is displayed on the screen. After the time set with the trigger delay the memory is over-written by new information.	5 ns . . . 0.2 s/div
Roll	Signal is built-up point by point at the right-hand side of the screen and moves to the left. When accumulator is completely filled, information is placed in register 3, next in 2, then in 1 and next in accumulator. After this, roll-mode stops, indicated by flashing "RUN" light.	0.5 s ... 60 min/div
Multiple	4 times single with "SAVE" in memories	0.2 µs ... 0.2 s/div

Display modes

Memory	Covers 2 div. screen height	
Channel display combinations		
Accumulator	Depends on input selection	
Register	Information as stored in accumulator can be selected for storage in each of the three register memories and is displayed if display button is depressed.	Total information held in STORE 1, 2 or 3 can be inverted.
Vertical position range	± 8 div	
Vertical expand	5 x	Memory covers 10 cm screen height. Indicated via LED in display section.
Horizontal expand	1 : > 2.5	Continuous
X-Y selection	Deflection in X-direction can be derived from time base or from memory contents derived from A-input	

	Memory modes	Clear	Accumulator memory is cleared
		Save (3x)	Contents of accumulator memory are stored in selected register
		Write	Input signal can be written in accumulator memory
		Lock	Memory system is closed
	Dot join	Pushbutton	Changes normal display mode (dot-join) into display of only dots.

1.2.8. Plot output

Horizontal	1 V / full scale	
Vertical	1 V / full scale	
⚠ Pen lift	TTL comp. "0" = unblanked (pen down) "1" = blanked (pen up)	open collector output max. load 0,5V at 500 mA cont.
Max. permissible voltage	20V PEAK	
Plot time	approx. 100 s.	
Plot sequence	B plot after A plot	

1.2.9. Interfaces

IEC-Bus	Built-in	
IEC-Bus	Settings and output controllable from bus-line controller	
Local/Remote	With IEC connector.	

1.2.10. X-Y Display

Y f(t)	From time-base	
Y f(x)	From YA input	Dot join is not in operation
Bandwidth	See YA	
Accuracy	< 5 %	Tube included
Phase difference	Distance between signal derived from A and signal derived from B is 1/25 div.	
Position	0 of stored A signal will be at centre of screen	

1.2.11. Calibration output

Frequency	2.5 kHz
Voltage	3 V
Current	6 mA

1.2.12. Power supply

⚠ Line voltage	100 ... 120 V ± 10 % 220 ... 240 V ± 10 %
Line frequency	50 ... 400 Hz ± 10 %
Power consumption	< 70 W

Battery		
Function	For memory back-up only	
Type	2 pen light batteries of 1.5 V	For instance 2 x 1.5 Philips R6P
Insulation	The insulation of the power supply fulfils the safety requirements of IEC 348 cl. I for metal-encased instruments	

Environmental characteristics

Note: The characteristics are valid only if the instrument is checked in accordance with the official checking procedure. Details on these procedures and failure criteria are supplied on request by the PHILIPS-organisation in your country, or by N.V. PHILIPS' GLOEILAMPENFABRIEKEN, TEST AND MEASURING DEPARTMENT, EINDHOVEN, THE NETHERLANDS.

Ambient temperature	+ 5 °C ... +40 °C −10 °C ... +40 °C −55 °C ... +75 °C	Rated range of use Operating temperature range Storage temperature in accordance with MIL 28800 and a maximum at 24 hours on high and low temperature
Altitude		
Operating	5000 m (15000 ft)	In accordance with IEC 68-2-13 test M
Non-operating	15000 m (50000 ft)	
Humidity	Acc. IEC 68 Db	Instrument withstands 95 % RH over a temperature cycle of 25 °C to 40 °C (non-operating)
Shock	30 m/s^2	Operating; half sine-wave shock of 11 ms duration; 3 shocks per direction for a total of 18 shocks.
Vibration	3 m/s^2	Operating; vibrations in three directions with a maximum of 20 min. per direction; 10 minutes with a frequency of 5 - 25 Hz and amplitude of 1.016 mm p-p; 10 min with a frequency of 25 - 55 Hz and an amplitude of 0.5 mm p-p. An extra 10 minutes of the resonant of frequency with the highest rise in amplitude. Unit mounted on vibration table without shock absorbing material.
Dimensions	Length 460 mm Width 316 mm Height 154 mm	Handle and controls excluded Handle excluded Feet excluded See also Fig. 1.2.
Weight	Approx. 12 kg	

Fig. 4.2. Dimensions

MODIFICATIONS:

MODIFICATIONS:

MODIFICATIONS:

MODIFICATIONS:

MODIFICATIONS:

CONTENTS

6.	CIRCUIT DESCRIPTIONS	6-5
6.1.	Blockdiagram description	6-5
6.1.1.	Acquisition	6-5
6.1.1.1.	The vertical channels	6-14
6.1.1.2.	The analog to digital converter	6-14
6.1.1.3.	Trigger and delay	6-16
6.1.1.4.	The sampling system	6-16
6.1.1.5.	The time-base system	6-17
6.1.1.6.	The acquisition control	6-17
6.1.2.	Display system	6-18
6.1.2.1.	Memories	6-18
6.1.2.2.	Dot join and plot	6-18
6.1.2.3.	Vertical final amplifier	6-19
6.1.2.4.	Horizontal final amplifier	6-19
6.1.2.5.	C.R.T. section	6-19
6.1.2.6.	Alphanumeric display	6-20
6.1.3.	Microprocessor	6-20
6.1.4.	Power supply	6-23
6.2.	Unit descriptions	6-23
6.2.1.	Front side unit A1	6-23
6.2.2.	Front unit A2	6-25
6.2.3.	Motherboard unit A3	6-44
6.2.4.	Microprocessor unit A4	6-45
6.2.5.	Trigger control unit A5	6-60
6.2.6.	RAM unit A6	6-61
6.2.7.	Buffer unit A7	6-72
6.2.8.	Conversion unit A8	6-82
6.2.9.	ACL unit A9	6-92
6.2.10.	CCD logic unit A10	6-110
6.2.11.	P^2CCD unit A11	6-122
6.2.12.	Time-base unit A12	6-135
6.2.13.	Delay trigger unit A13	6-147
6.2.14.	IEC unit A14	6-156
6.2.15.	DC power unit A15	6-157
6.2.16.	AC power unit A16	6-166
6.2.17.	Rear side unit A17	6-174
6.2.18.	Delay line unit A18	6-175
6.2.19.	CRT socket A19	6-176
6.2.20.	Final ampl. unit A20	6-178
6.2.21.	Amplifier unit A21	6-188
6.2.22.	Trigger unit A22	6-211
6.2.23.	EHT unit A23	6-231
6.2.24.	Driver unit A34	6-232

7.	DISMANTLING THE INSTRUMENT	7-1
7.1.	Warnings	7-1
7.2.	Removing the covers	7-2
7.3.	Access to parts for checking and adjusting procedure	7-3
8.	CHECKING AND ADJUSTING	8-1
8.1.	General information	8-1
8.1.1.	Recommended test equipment	8-2
8.1.2.	Preliminary settings	8-3
8.2.	Survey of adjusting elements	8-4
8.3.	Checking and adjusting procedure	8-8
8.3.1.	Power supply	8-8
8.3.2.	Cathode - ray - tube circuit	8-9
8.3.3.	Pre adjustment P^2CCD circuit	8-12
8.3.4.	Balance adjustments	8-13
8.3.5.	Final amplifier adjustments	8-15
8.3.6.	Vertical channels	8-17
8.3.7.	Time coefficient adjustments	8-20
8.3.8.	Triggering	8-21
8.3.9.	X-Y mode	8-24
8.3.10.	Range indication	8-24
8.3.11.	Plotter outputs	8-24
8.3.12.	Periodic and random deviations	8-24
8.3.13.	Effect of mains voltage variations	8-24
8.4.	Interactions	8-25
8.5.	Performance check	8-29
9.	CORRECTIVE MAINTENANCE	9-1
9.1.	Replacements	9-1
9.1.1.	Replacing single knobs	9-1
9.1.2.	Replacing double knobs	9-1
9.1.3.	Replacing carrying handle	9-2
9.1.4.	Removing the cabinet plates and the screen bezel	9-3
9.1.5.	Replacing the plug - in units	9-4
9.1.6.	Replacing the P^2CCD unit A11	9-5
9.1.7.	Replacing the front unit A2	9-5
9.1.8.	Replacing the LEVEL control	9-7
9.1.9.	Replacing the trigger mode switch	9-7
9.1.10.	Replacing the C.R.T.	9-7
9.1.11.	Replacing the delay line unit A18	9-8
9.1.12.	Removing the rear plate together with the AC POWER UNIT A16	9-8
9.1.13.	Removing the DC POWER UNIT A15	9-8
9.1.14.	Removing the mains filter	9-8
9.1.15.	Removing the EHT unit A23	9-8
9.1.16.	Removing the vertical amplifier unit A21	9-8
9.1.17.	Removing the trigger unit A22	9-8
9.2.	Soldering techniques	9-9
9.3.	Handling MOS devices	9-10
9.4.	Special tools	9-11
9.5.	Recalibration after repair	9-12
9.6.	Instrument repackaging	9-12
9.7.	Trouble shooting	9-13

9.7.1.	Introduction	9-13
9.7.2.	Power-up routine	9-13
9.7.3.	Trouble shooting aids	9-15
9.7.4.	Service faultfinding software routines	9-15
9.7.5.	Trouble shooting hints	
9.7.6.	Overal view of provisions and service methods	9-20
9.7.7.	Mains voltage setting	9-26
10.	INTRODUCTION TO MICROPROCESSOR'S	10-1
10.1.	A brief encounter	10-1
10.2.	Coming to terms	10-1
10.3.	System features	10-4
11.	EXPLANATION OF USED SYMBOLS	11-1
12.	PARTS LISTS (Subject to alteration without notice)	12-1
12.1.	Mechanical parts	12-2
12.2.	Electrical parts	12-8
13.	ADDITIONAL DIAGRAMS	13-2

6. CIRCUIT DESCRIPTIONS

6.1. BLOCK DIAGRAM DESCRIPTION

This chapter serves to explain the main functions of the oscilloscope. The working principle is divided into four sections:

6.1.1. Acquisition system
6.1.2. Display system
6.1.3. Microprocessor and software
6.1.4. Power supply

6.1.1. Acquisition system

By means of the acquisition system the analog input signals are converted into digital information.
Before conversion the analog signals must be adapted so that an Analog to Digital Converter (ADC) is able to convert them. This system can be divided into the following sections:

6.1.1.1. The vertical channels
6.1.1.2. The analog-to-digital convertor (including P^2CCD)
6.1.1.3. Trigger and trigger delay circuits
6.1.1.4. The sampling system
6.1.1.5. The time base system
6.1.1.6. The acquisition control

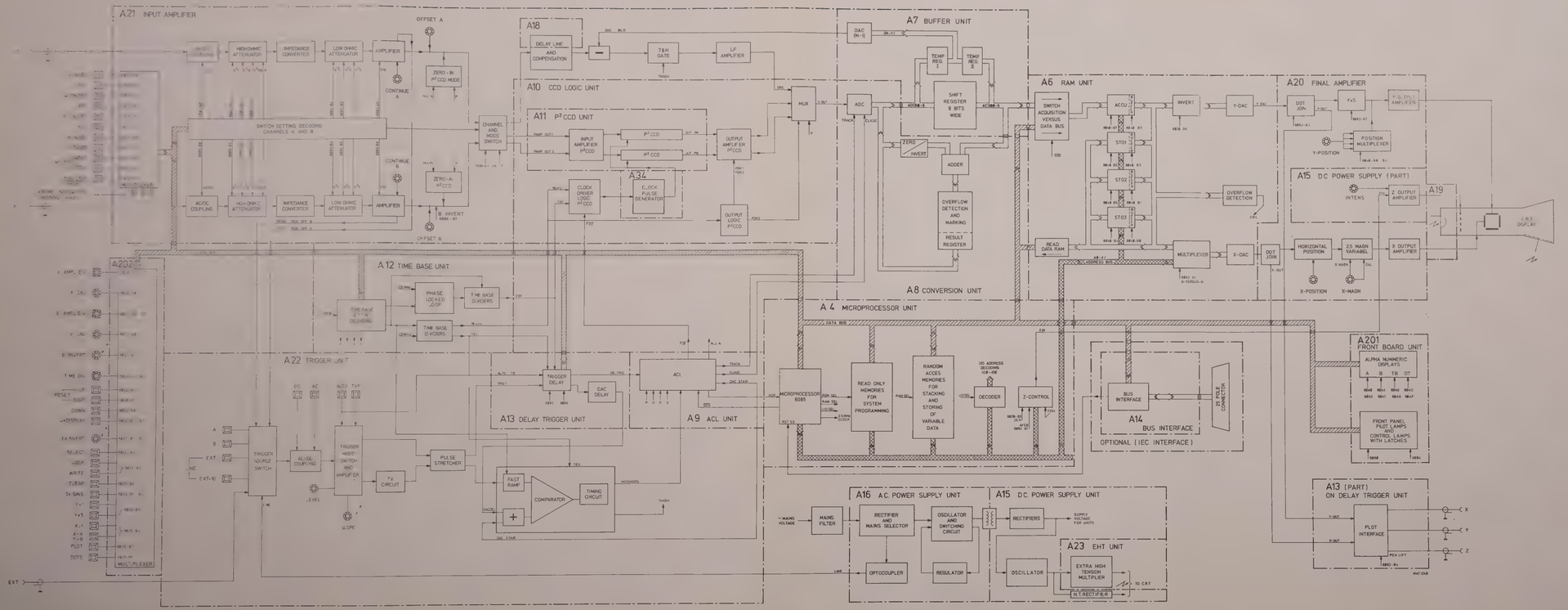

Fig. 6.1.1.

6.1.1.1. The vertical channels (unit A21 page 6–188)

The vertical channel consist of two identical channels A and B except for the possibility B invert.
The sensitivity range is 10 mV/div ... 50 V/div in a 1-2-5 sequence.
All front panel settings of the vertical channels except for the CONTINUE an OFFSET controls are read each main loop of the program of the microprocessor system via multiplexers.
After calculation in the microprocessor, the settings are written into the switch setting decoding. This decoding generates the signals to set the ac/dc coupling, the high and low ohmic attenuators and the amplifier gain according to the front panel settings. Moreover these settings can be determined by the IEC Bus interface option
The input signal is applied to the channel switch via the ac/dc coupling, the high ohmic attenuator, the impedance convertor, the low ohmic attenuator and the amplifier.
Just after the amplifier a zero in signal NULIN for P²CCD-mode operation is applied to the channel switch.
For time base settings of 3600 s/div. 0.5ms/div - and 0.2 µs/div - 5 ns/div the channel switch connects the signal to the delay line.
In dual channel mode (A and B) the microprocessor system generates via the switch setting decoding the signals A ON and B ON in such a way, that a chopped signal is applied to the delay line. The output of the delay line is connected to a compensation network to correct the faults introduced by the delay line.

6.1.1.2. The analog-to-digital convertor (including P²CCD) (units A7 + A10 + A11 + A34 page 6-72/-110/-122/-232).

The output signal of the delay line is applied to the T&H (Track and Hold) gate via a subtractor.
This T&H gate tracks the input signal continuously and at a command TANDH its output is held to the momentary value of the input signal for about 4 µseconds. The signal TANDH is generated on the trigger unit and will be described later. Via a low frequency amplifier and a multiplexer the output signal of the T&H gate is applied to the sample and hold gate of an ADC in which the output signal of the T&H gate is taken over and held to the same value for at least the conversion time.
The ADC is controlled by the signals TRACK and CLADC which are generated at the Acquisition Control Logic A9 (ACL).

To eliminate faults of the ADC conversion a correction takes place.
In ROLL, DIRECT and SAMPLING (see operating manual and chapter 6.1.1.6.) mode the correction functions as follows:

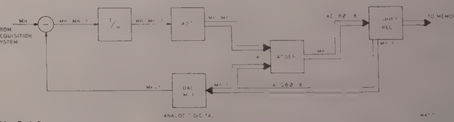

Fig. 6.1.2.

To reduce errors in conversion, analog samples for digitising are compared with preceding samples, these being subtracted so that only small increments are converted to digital values in the ADC. After conversion, the digital equivalent of the original analog signal is produced by adding the differential signal from the ADC to the digital value of the preceding sample.
Referring to the block diagram, M_n is the new sample of the input signal from the acquisition system; M_{n-1} is the preceding sample, derived from the shift register and re-converted by DAC M-1 to analog form. At the input to the Track and Hold circuit, M_{n-1} is subtracted from M_n to produce a differential analog voltage, which is then converted to digital form in the ADC and added to the preceding digital value M_{n-1}.

$$\text{i.e. } (M_n - M_{n-1}) + M_{n-1} = M_n$$

After this procedure, the adder output value M_n will be shifted into a shift register as a new and corrected value. This system of digital adding is also used, in a different way, in the P^2CCD-mode as described below.

For time base settings of 0.2 ms/div - 0.5 µs/div the instrument operates in P^2CCD mode. P^2CCD means Profiled Peristaltic Charge Coupled Device in which an input signal can be written-in at a high speed and afterwards can be read out at a low speed.

If the instrument operates in P^2CCD mode, the output of the channel selector is applied to the input amplifier of the P^2CCD. Because of the principle of the P^2CCD in dual channel mode the signals – A and + B are applied as P AMP OUT 1 and P AMP OUT 2 resp. The P^2CCD contents is read out by a 78 kHz signal and written in by a Time Base Fast (TBF) pulse via the clock driver input logic. The output of the P^2CCD is amplified and applied to a multiplexer which switches between the two P^2CCD outputs. So in the P^2CCD mode the chopper switch of the channel switch is inoperative.
Output VOUT of the multiplexer is applied to the sample and hold gate of the ADC.

Due to internal P^2CCD faults and differences between the frequencies f_{in} and f_{out}, an incorrect zero level of the P^2CCD output signal is possible as shown in the following graph.

Fig. 6.1.3. P^2CCD output signal with shifting zero level

Under these conditions, the total faulty contents of the P^2CCD are converted from analog form to digital in 256 steps and after each conversion the data is put on the ADCBØ ... ADCB8 bus and directly shifted into the 9-bit shift register on buffer unit A7. After 256 steps, the total P^2CCD contents are stored here, and the register is then blocked.

In order to correct the zero level, the P^2CCD input is switched to zero by a signal NULIN and 256 samples of this zero signal are shifted into the P^2CCD at the same frequency f_{in} as for the normal input signal.

By reading the P2CCD contents again, with the same frequency f_{out} (78 kHz) as for the faulty ADC input signal, an incorrect zero level having the same errors as described above will appear on the P2CCD output as shown below.

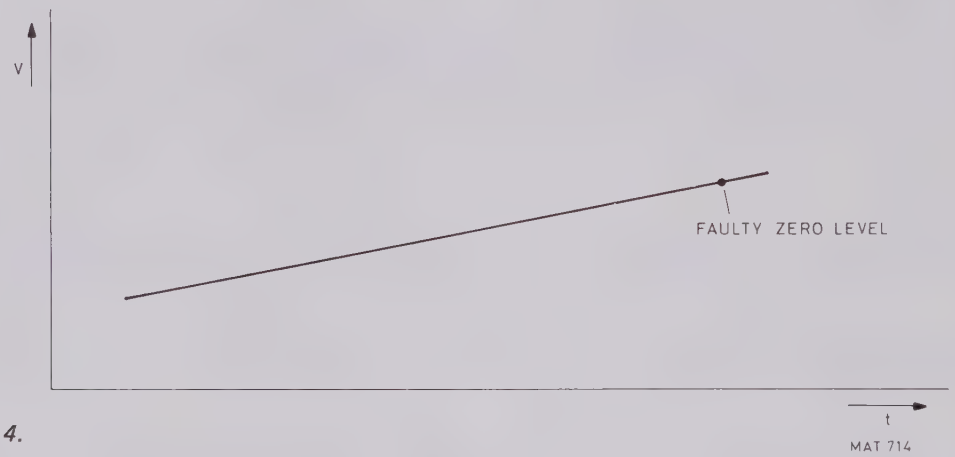

Fig. 6.1.4.

This incorrect zero level is then digitally subtracted (in 256 steps) from the faulty ADC input signal, which was already stored in the shift register.
The corrected result is then re-stored in the shift register.

6.1.1.3. Trigger and trigger delay circuits (units A13 + A22 pages 6-147 + 6-211)

In the trigger channel a signal derived from one of the sources A, B, external or line is applied to the AC/DC switch. The output of this switch is applied to the automatic level circuit which determines the peak-peak value. If automatic triggering is selected the peak-peak value is applied to the level potentiometer to obtain the possibility to level over the complete signal.
In the modes AC or DC a constant voltage is applied to the level potentiometer. In TVF mode the same voltage is applied to both sides of the potentiometer so that leveling is inoperative.
The slope determines which voltage is selected; positive or negative peak voltage.
After amplification the slope is selected and the trigger signal is applied to the pulse stretcher. The TV path in parallel applies its output signal also to the pulse stretcher.
If the TV signal contains equalisation pulses there is a selection to odd or even frame pulses. Otherwise only frame pulses are available at the output.
The pulse stretcher output signal is applied to two circuits: the sampling circuit and the trigger delay circuit.
The trigger delay circuit contains a down counter of which the loading is effected by the microprocessor system via an output port with a value derived from the front panel settings in combination with the TIME/DIV switch setting. Upon the receipt of a trigger pulse from the trigger circuit the down-counter starts counting time base pulses (see also 6.1.1.5.) until its zero state is reached. This effects in a pulse which blocks the reading of new information in the shift register. After this the shift register contents can be copied in the ACCU memory.

6.1.1.4. The sampling system (unit A22 page 6–211)

In sampling mode the output of the pulse stretcher is controlling the fast ramp generator. The ramp is determined by the TIME/DIV switch setting via the microprocessor and the control signals LØ ... L2. The fast ramp output is applied to a comparator. At the other input of the comparator a signal DACSTAIR is applied which is a stair case voltage derived from the ACL counter that increases one step every time that a conversion is completed and a COUNT pulse is counted by the ACL counter. To this staircase voltage a voltage called DACDEL is added which is derived from the trigger delay unit. This is a voltage proportional to the preset trigger delay.
If now the fast ramp voltage reaches the same potential as the sum of DACDEL and DACSTAIR, the system generates a HOCON (Hold and convert) and a TANDH (Track and hold) pulse to start an analog to digital conversion. If a conversion is completed the output of the pulse stretcher is enabled to generate via the fast ramp generator a new HOCONDRS pulse to start the next conversion. Now the DACSTAIR signal will be increased one stair level so this conversion takes place at the following point of the repetitive input signal.

6.1.1.5. The time base system (unit A12 page 6–135)

With respect to an ordinary oscilloscope this digital storage oscilloscope does not need a sawtooth time base generator because the position on the screen is determined digitally.
Therefore the time-base system consists mainly of frequency dividers.
The base frequency is 2.5 MHz derived from the cristal clock frequency of the microprocessor system.
Because the need of higher frequencies then 2.5 MHz a voltage controlled oscillator is introduced with a frequency of 100 MHz. This frequency is kept stable by dividing it by a factor of 80 and to compare it with the microprocessor clockpulse divided by a factor of 2. Now both signals have a frequency of 1.25 MHz and via a feedback loop the VCO is controlled.
For the P^2CCD mode a TBF signal is generated and in DIRECT and ROLL mode a TBS signal.
The dividing factors, so the frequencies of the TBF and TBS signals, are determined by the setting of the TIME/DIV switch which is decoded by the time base setting decoding.
The frequency of the TBF and TBS signals is such that for one horizontally division on the screen exactly 25 TBF or TBS periods are generated.

6.1.1.6. The acquisition control (unit A9 page 6–92)

The most important part of the acquisition control is a counter which counts the number of conversions by counting COUNT pulses.
Each conversion is initiated by a HOCON (hold and convert pulse) and results after completion into a COUNT pulse.
So it is counting how many input values are written into the shift register.

The acquisition control is operating in a different way for each of the four system modes DIRECT (D) - ROLL (R) - SAMPLING (S) and P^2CCD (P).
In each of these four modes NDR (New Data Ready) pulses are generated to indicate to the microprocessor that new data is ready and can be copied in the ACCU memory.
The microprocessor in turn answers with SOD pulses telling that the copying of new information into the ACCU memory is completed and that new information can be stored in the shift register.

Direct mode

After a hold-off period in which at least 256 new input signal samples are shifted into the shift register, so after a total refreshment of the shift register contents the acquisition system is enabled to react on a new trigger pulse.
Upon the receipt of such a trigger pulse a NDR pulse will be generated just after the completion of the last conversion.

ROLL-mode

The ROLL-mode action is started when ROLL-mode is selected and the front panel R/S pushbutton is depressed. This results in the generation of TBS pulses by the time-base unit. These TBS pulses are converted by the trigger unit in HOCONDRS (Hold and convert) pulses which are used in the ACL unit to initiate the conversions of new input signal samples.
After each completed conversion a COUNT pulse is generated and so a NDR pulse.

On each NDR pulse the total shift register contents are copied into the RAM memory and in the same time the shift register output information is shifted again into this shift register by coupling the output of the shift register directly to its input.
Furthermore ROLL-mode functions are under the control of the software.
The software counts the number of NDR pulses and after 256 NDR pulses it saves the ACCU contents into STO3, after again 256 pulses into STO2, then into STO1. After in total 4 x 256 pulses the software stops the ROLL-mode action and indicates this by generating a flashing command for the RUN lamp.

Sampling mode

In sampling mode a HOCONDRS pulse is generated on each incoming TRIST pulse except for those coming within the hold-off period. These HOCONDRS pulses initiate conversions of the input signal samples.
After 256 samples are converted and stored in the shift register a NDR pulse is generated and the shift register contents are copied into the ACCU memory.
The microprocessor generates a $\overline{SOD}$ signal after this copying, the ACL counter is reset to zero and the system reacts again on new incoming triggers.

P²CCD-mode

After reading in at least 256 samples of new input information into the P²CCD circuit, these samples are read out, converted and shifted into the shift register.
Then for a period of about 5 ms zero information will be shifted into the P²CCD, controlled by the signal NUL IN from the ACL unit which is active in the vertical channels (see also 6.1.1.1.).
These zero information is then read out and corrected (see also 6.1.1.2.) with the 256 samples of signal information which was already stored in the shift register and the corrected information is shifted again in the shift register. This total procedure results then in a NDR pulse and copying of shift register contents into the ACCU memory can be started.

6.1.2. Display system

The display part consists of hardware to store and display data on the CRT display. Moreover this part arranges the coding for information to be displayed on pilot and control lamps and on the alphanumeric display. This chapter can be divided in:

6.1.2.1. Memories
6.1.2.2. Dot join and plot
6.1.2.3. Vertical amplifier
6.1.2.4. Horizontal amplifier
6.1.2.5. CRT section
6.1.2.6. Alphanumeric display

6.1.2.1. Memories (unit A6 page 6–61)

The memories are consisting of four separate parts which can be written and read independently. If from the acquisition control logic the signal New Data Ready arrives, new information is written in the ACCU.
This means that the contents of the shift register is copied in the ACCU.
This information is now read out continuously with a speed, determined so that the display on the CRT seams to be steady.
At a "SAVE" command the contents of the ACCU is copied in one or more of the registers STO1 . . . STO3.
The registers STO1 ... STO3 can only copy information from the ACCU. The only other possibility to write in one of the memories STO1 . . . STO3 is with the use of the IEC-bus interface via the databus.
The information is stored in the memories as a two-complement notation which means that the data are integers with values from −128 up to and including +127. To convert this in straight binary notation for the YDAC only the most significant bit has to be inverted. After that the complete information can be inverted by operating the push pull knobs "pull to invert". This inversion takes place by an eight-bit-exclusive-or.
Via the databus the information can be applied also to the X-DAC. This is necessary in the mode X = A; Y = B.

6.1.2.2. Dot join and plot (unit A20 page 6–178)

If the mode "DOTS" is selected separate dots will appear on the CRT display.
The dot join circuit generates straight lines between the consecutively dots. The block diagram of the dot join principle is shown in the figure below.

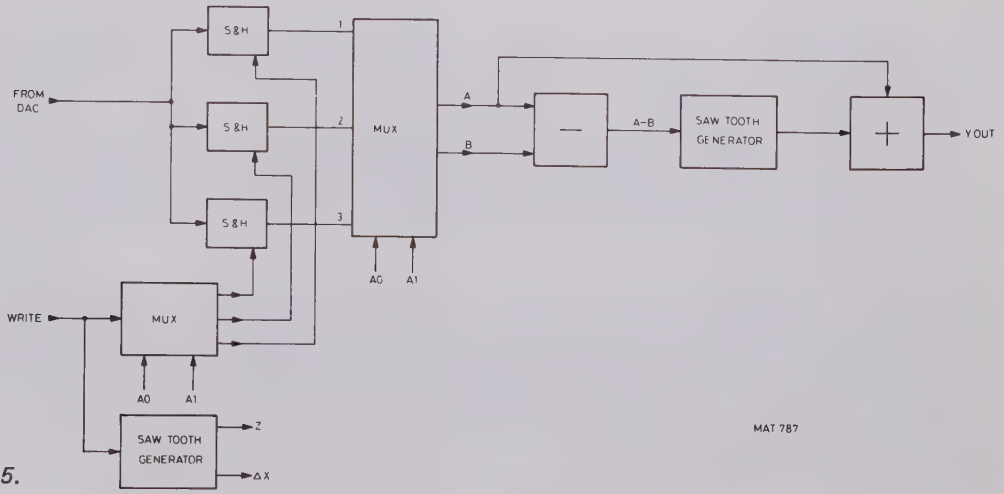

Fig. 6.1.5.

In dual channel operation on points 1 and 3 is always the information of one channel. By the control signals AØ and A1 this information is switched to the output of the multiplexer. Suggest A is the oldest information and B the newest, then, the subtractor output is A-B. This voltage controls the variable sawtooth generator of which the ramp is determined so that the B value is reached before a new write pulse arrives. The output of the sawtooth generator is added to the oldest information A and applied to the final amplifier.
If the sawtooth generator is reset the CRT display is blanked.
For X-deflection also a sawtooth voltage is generated but now with a fixed ramp and amplitude.
The plot action is principally a software matter.
The microprocessor system activates the sample and hold gates for the plots so that every 0.25 sec a new sample is taken. This is visible on the CRT display as an intensified point so it is traceable for how far the plot action is got.
The speedness is choosen in such a way that a simple chart recorder is able to record the information.

6.1.2.3. Vertical amplifier (unit A20 page 6–178)

After the dot join it is possible to magnify the signal 5x. Now it is possible to obtain the contents of the ACCU or STO1 ... STO3 for full screen deflection. In Y x 1 mode for each memory two divisions are available. Midrange of the position controls effects in displaying the memory base lines on the CRT at resp. 1, 3, 5 and 7 cm with respect to the screen top. This offset is switched to zero if the Y x 5 mode is choosen.
Now all base lines of the memories are situated in the centre of the screen.
The final amplifier consists of a long tailed pair which drives the CRT directly. This is possible because of the low bandwidth of 1 MHz.

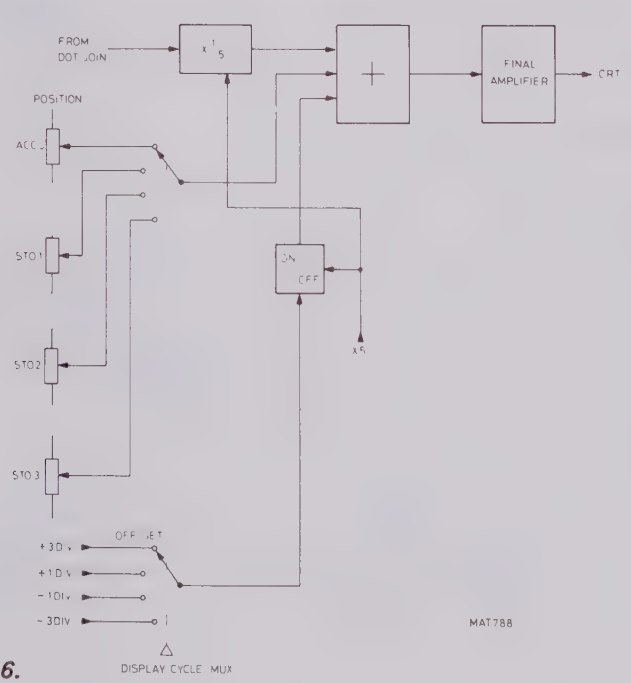

Fig. 6.1.6.

6.1.2.4. Horizontal amplifier (unit A20 page 6–178)

The horizontal amplifier consists of an integrated circuit for the magnifier adjusting and a final amplifier consisting of two shunted feedback pushpull amplifiers. Position control is effected at the input of the integrated circuit.

6.1.2.5. CRT section (unit A15 page 6–157)

Because of the principle of the CRT it is not necessary to correct the barrel and pin cushion distortion.
The cathode current of the CRT as used in the concept of this oscilloscope will never yet very high so that a focus voltage dependent to the intensity setting can be arranged automatically. Now there is no need for a front panel focus control.
The Z-control is arranged by the microprocessor system.
Only if a memory is read the CRT is unblanked.
If via the overflow detection a maximum or a minimum value is exceeded this part is displayed with a frequency of approx. 5 Hz so the display blinks.

6.1.2.6. Display (unit A2 page 6–25)

There are four front-panel alphanumeric displays:
- channel A V/DIV display
- channel B V/DIV display
- s/DIV display
- DIV display.

Each of these alphanumeric displays is an intelligent four-digit unit with a built-in CMOS integrated circuit. The integrated circuit contains a memory, an ASCII-character generator, and a LED multiplexing and drive circuit.

The displays are controlled by the microprocessor, each individual display section being selected by means of addresses fed to the ADDRESS-bus by the microprocessor.

The characters that are required to be displayed are generated by the microprocessor system in Standard ASCII character code and are placed on the databus (signals DØ ... D7).

Control and pilot lamps

The NOT TRIG'D, RUN and REMOTE lamps are directly controlled by the signals $\overline{\text{NOT TRIG'D}}$, $\overline{\text{RUNL}}$ and $\overline{\text{REM}}$, which are generated on the microprocessor board.

The DISPLAY lamps, the SELECT lamps, the UNCAL A and UNCAL B lamps, the A and B AMPL/DIV control lamps and the TIME/DIV control lamps are controlled by addresses generated by the microprocessor system.

6.1.3. Microprocessor (unit A4 page 6–45)

As shown in the simplified block diagram, the micro-processor unit basically consists of the following circuit elements:
- A micro-processor integrated circuit block for controlling and organising data flow.
- Ereasable and programmable read-only memories (EPROMs) for system programming.
- Random-access memories (RAMs) for stacking and storing the variable data.
- Address and data selection latches for the multiplexed address bus.
- Decoders for RAM and ROM selection and address decoding.
- Trap and watchdog circuits to guard against loss of data
- Two-way buffer circuit to the system data-bus.
- A blanking circuit for the c.r.t.

The heart of the microprocessor unit is an 8-bit microprocessor type 8085 with 16 address lines.
The first eight address lines AØ ... A7 are multiplexed with the eight data lines DØ ... D7 and are defined as ADØ ... AD7. Addressing is selected by the ALE (address latch enable) signal from the microprocessor, which gives an external indication when address information is on the bus-lines.

Trap Input Circuit

The TRAP input is effective when the battery back-up facility is used. It prevents the RAM contents being disturbed when the instrument is switched off or in the event of a power failure. The TRAP input forces the microprocessor to continue with the execution of the program at the starting address of the POWER DOWN routine. Failure of the power supply activates the TRAP input of the microprocessor.

A 5 MHz crystal, is connected to the clock inputs of the microprocessor to provide an accurate timing reference source.

A reset signal is generated when the instrument is switched ON. This reset signal forces the microprocessor to start the execution of the main program.

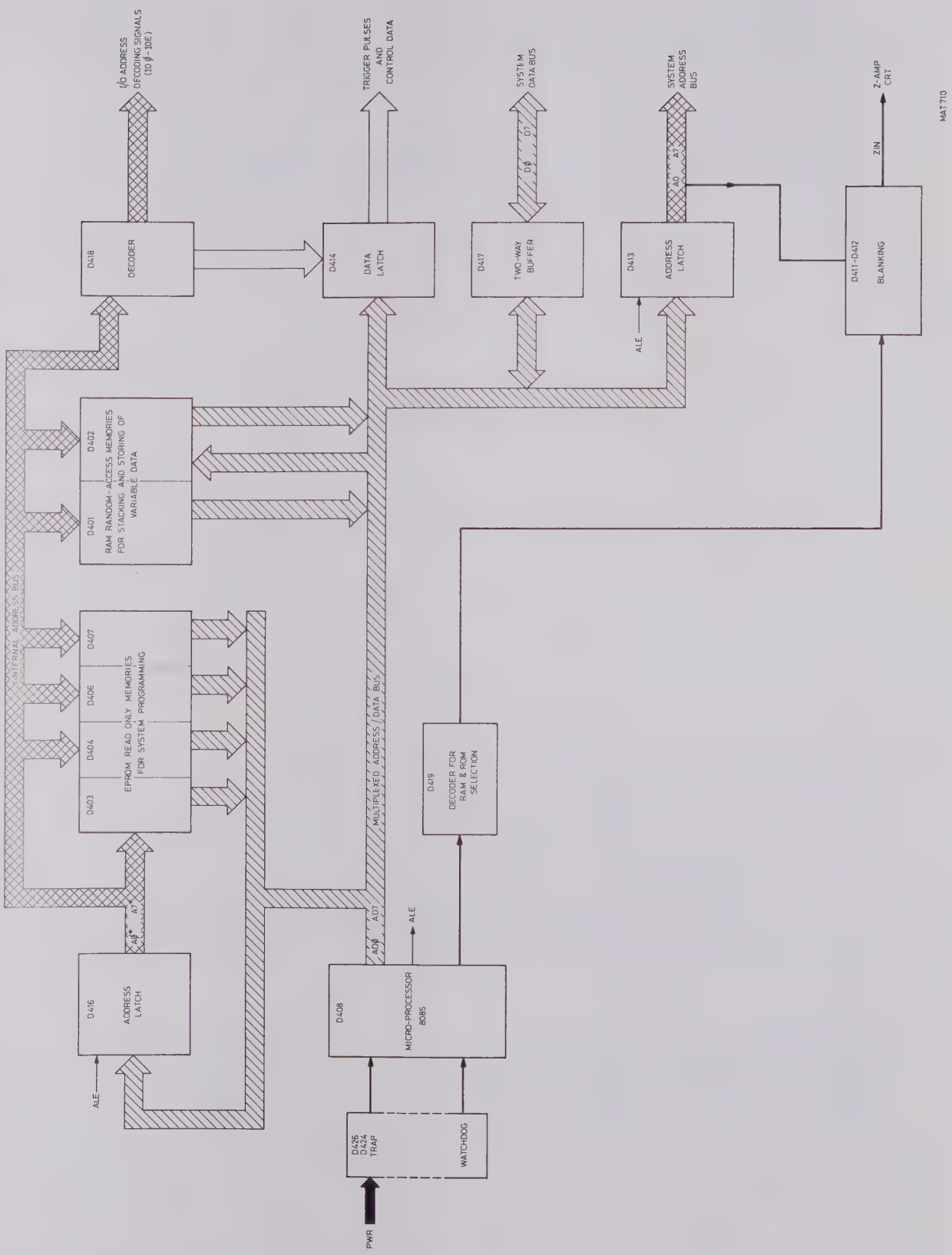

Fig. 6.1.7. Simplified block diagram microprocessor unit.

Connection to the system address bus

The first eight address bits placed by the microprocessor on the multiplexed address-data bus lines AD$\emptyset$ ... AD7 have to be separated from the eight data bits.
This separation is achieved by an address latch, which is enabled by signal ALE.
The group of output signals A$\emptyset$ ... A7 constitute the system address bus.

Connection to the system data-bus

The eight data bits placed by the microprocessor on the multiplexed address-data bus lines AD$\emptyset$ ... AD7 have to be separated from the first eight address bits.
This separation is done by a bidirectional buffer.

System memory map

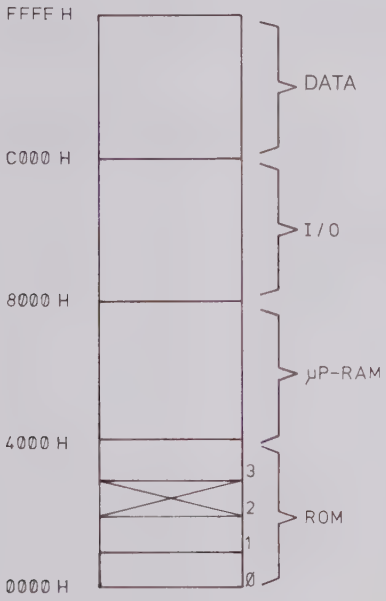

Fig. 6.1.8.

ROM memory

The ROM (read-only memory), which contains the system program, consists of the two EPROM chips of 4K-bytes each (4096X 8 bits).
Because the microprocessor's first eight address lines AD$\emptyset$ ... AD7 are multiplexed in the microprocessor with the data lines, the addresses have to be latched by the address latch D416 with the aid of the ALE signal.
When a certain ROM address is selected, the contents of the selected location are placed on the multiplexed address-data bus lines AD$\emptyset$ ... AD7.

RAM memory

The µP-RAM (microprocessor random access memory) is used by the microprocessor for stack purposes and for storage of variable data.
It consists of two RAM chips - of ¼K-nibbles each (256 x 4 bits), which means that a maximum of 256 bytes of data can be stored.

Each µP-RAM memory address can be selected by the address lines A$\emptyset$* ... A7*.

Reading the RAM contents or writing data into a RAM location is controlled by the signals $\overline{RD}$* and $\overline{WR}$*.

The data to be written into, or read from the RAM memory is transported via the multiplexed address-data bus AD$\emptyset$ ... AD7.

Blanking circuit

This circuit provides for a blanking signal ZIN (Z-amplifier input) for blanking the trace on the c.r.t. display.

6.1.4. **Power supply** (unit A15 page 6—157 and A16 page 6—166)

The mains voltage is applied via the mains filter and the mains selector switch on the AC POWER UNIT A16 to a rectifier where it is full-wave rectified and fed to a regulated sine-converter (oscillator and switching circuit).
The output voltage of the sine converter is kept constant by regulating the duty cycle of the applied voltage by a special integrated circuit.
This output voltage is applied to the primary of a transformer, the secundary voltages of this transformer are applied to DC POWER unit A15 where they are full-wave rectified, smoothed and applied to the various circuits.
Also the voltages for the C.R.T. filament and the C.R.T. cathode (−1,5 kV) are generated here.
The −1.5 kV is also applied to the EHT unit A23 which gives a high tension for g8 of the C.R.T.

The MAINS triggering is taken direct from the mains and, via an opto-isolator, fed to the trigger circuitry on a safe level.

6.2. UNIT DESCRIPTIONS

6.2.1. **Front side unit A1**

The front side unit consists of an aluminium front cast on which the following items are mounted.

- LED B24 + LED-holder
- Light reflector assembly inclusive two lampholders and two 28 V - 80 mA lamps E1 and E2.
- CAL output terminals X1 and X2.
- Measuring earth socket X5.
- BNC input socket X6 for external triggering.
- LEVEL/SLOPE control R9/S27.
- INTENS control R15.
- TRACE ROTATION control R16.
- Trigger mode selector switch S29.

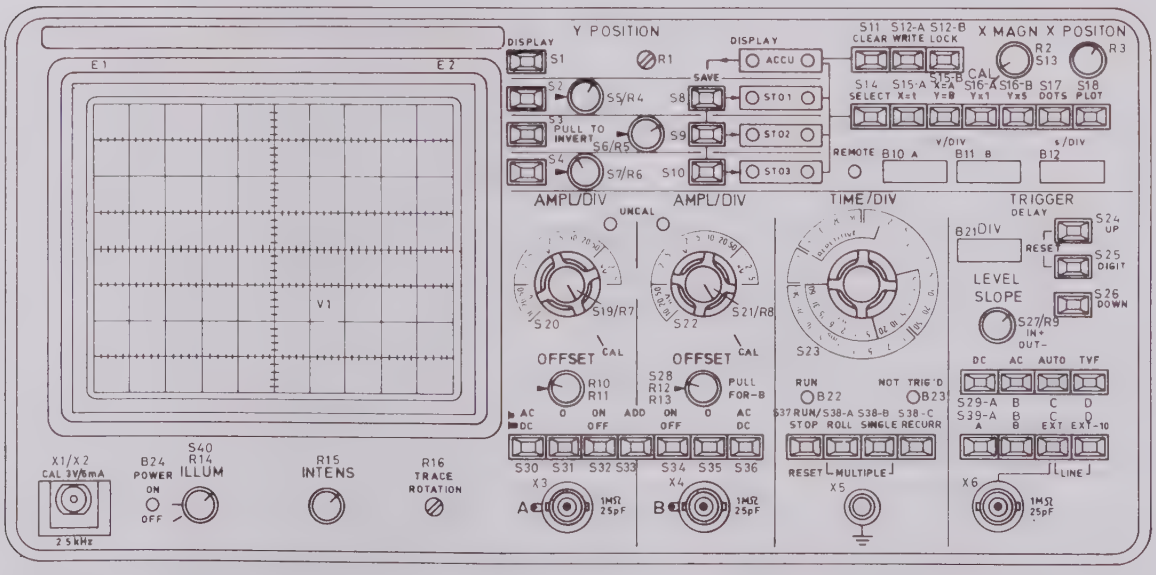

Fig. 6.2.1.

MAT1250

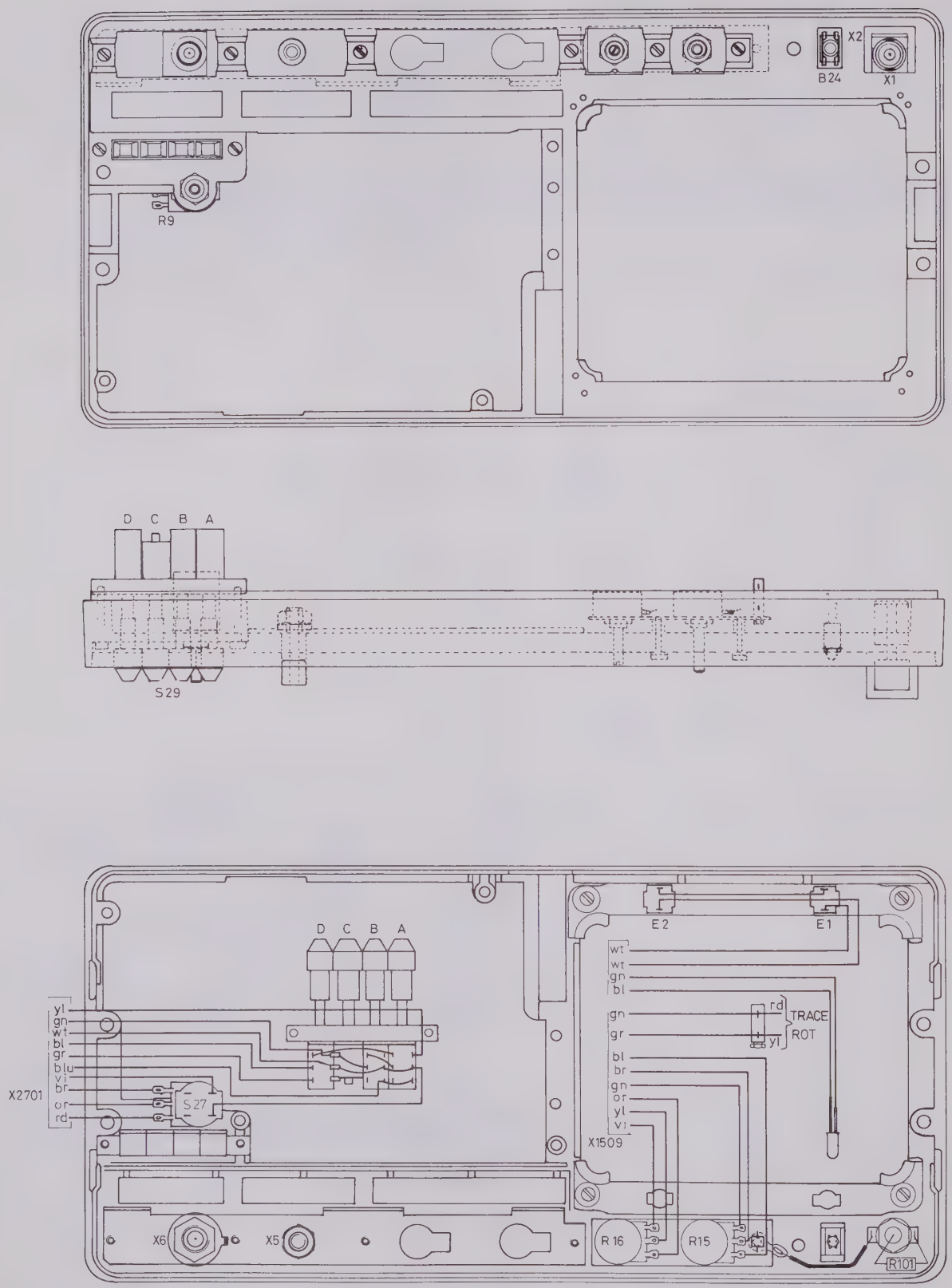

Fig. 6.2.2.

MAT 707A

6.2.2. Front unit A2

6.2.2.1. Front board A201

The front board houses all the front-panel control lamps, pilot lamps and alphanumeric displays.

Alphanumeric intelligent displays

There are four front-panel alphanumeric displays:
- channel A V/DIV display
- channel B V/DIV display
- s/DIV display
- DIV display

Each of these alphanumeric displays is an intelligent four-digit unit with a built-in CMOS integrated circuit. The integrated circuit contains a memory, an ASCII-character generator, and a LED multiplexing and drive circuit.

The displays are controlled by the microprocessor, each individual display section being selected by means of addresses fed to the ADDRESS-bus by the microprocessor.

DECADE	AØ	A1
Ø	0	0
1	0	1
2	1	0
3	1	1

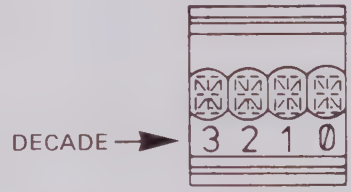

A V/DIV display

DECADE	CONTROL ADDRESS
Ø	80A0
1	80A1
2	80A2
3	80A3

B V/DIV display

DECADE	CONTROL ADDRESS
Ø	80A4
1	80A5
2	80A6
3	80A7

s/DIV display

DECADE	CONTROL ADDRESS
Ø	80A8
1	80A9
2	80AA
3	80AB

DIV display

DECADE	CONTROL ADDRESS
Ø	80AC
1	80AD
2	80AE
3	80AF

The characters that are required to be displayed are generated by the microprocessor system in Standard ASCII character code and are placed on the data-bus (signals DØ ... D7).

CHARACTER SET
(all other input codes display 'BLANK')

CHARACTER SET

D6 D5 D4 D3 \ D2 D1 D0	L L L	L L H	L H L	L H H	H L L	H L H	H H L	H H H
L H L L		!	"	#	$	%	&	'
L H L H	(	)	*	+	,	-	.	/
L H H L	0	1	2	3	4	5	6	7
L H H H	8	9	:	;	<	=	>	?
H L L L	@	A	B	C	D	E	F	G
H L L H	H	I	J	K	L	M	N	O
H L H L	P	Q	R	S	T	U	V	W
H L H H	X	Y	Z	[	\	]	^	_

Control and pilot lamps

The NOT TRIG'D, RUN and REMOTE lamps are directly controlled by the signals $\overline{\text{NOT TRIG'D}}$, $\overline{\text{RUNL}}$, and $\overline{\text{REM}}$, which are generated on the microprocessor board.

The DISPLAY lamps (DISØ ... DIS3), the SELECT lamps (SELØ ... SEL3), the UNCAL A and UNCAL B lamps, the A and B AMPL/DIV control lamps LA1, LA1Ø, LB1, LB1Ø and the TIME/DIV control lamps LREC - LROLL are controlled by the addresses 8ØBØ and 8ØB4 as shown in the table in conjunction with the data bits DØ to D7.

ADDRESS	D7	D6	D5	D4	D3	D2	D1	DØ
8ØBØ	SEL3	SEL2	SEL1	SELØ	DIS3	DIS2	DIS1	DISØ
8ØB4	UNCB	UNCA	LROLL	LREC	LB1Ø	LB1	LA1Ø	LA1

Selection of a display segment or a group of pilot lamps or control lamps is achieved by decoder D203.
This three-bit decoder decodes the three address-bits A2, A3 and A4 if the input signal combination WR.I0A is active. This results in one active decoder output line at a time.
The I0A signal is an address decoding signal for address lines A5 ... A15 and decodes addresses 8ØAØ to 8ØBF.

INCOMING SIGNAL	OUTGOING SIGNAL	GENERATED ON UNIT	DESCRIPTION
A0		A4	Address bits from system address bus
A1		A4	
A2		A4	
A3		A4	
A4		A4	
D0		A4	Data bits from system data-bus
D1		A4	
D2		A4	
D3		A4	
D4		A4	
D5		A4	
D6		A4	
D7		A4	
$\overline{\text{NOT TRIG'D}}$		A4	Control for NOT TRIG'D lamp
$\overline{\text{IOA}}$		A4	Address decoding signal for addresses 80A0H - 80FFH (Display select)
$\overline{\text{REM}}$		A4	Control for REMOTE lamp
$\overline{\text{RUNL}}$		A4	Control for RUN lamp
$\overline{\text{WR}}$		A4	Signal WRITE from microprocessor
+5 V		A15	
		A15	

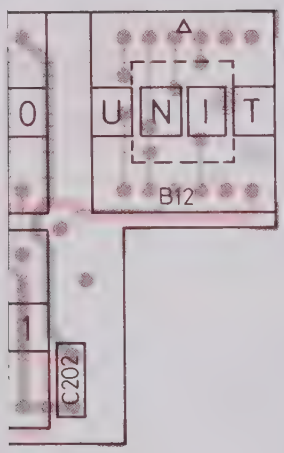

Fig. 6.2.3.

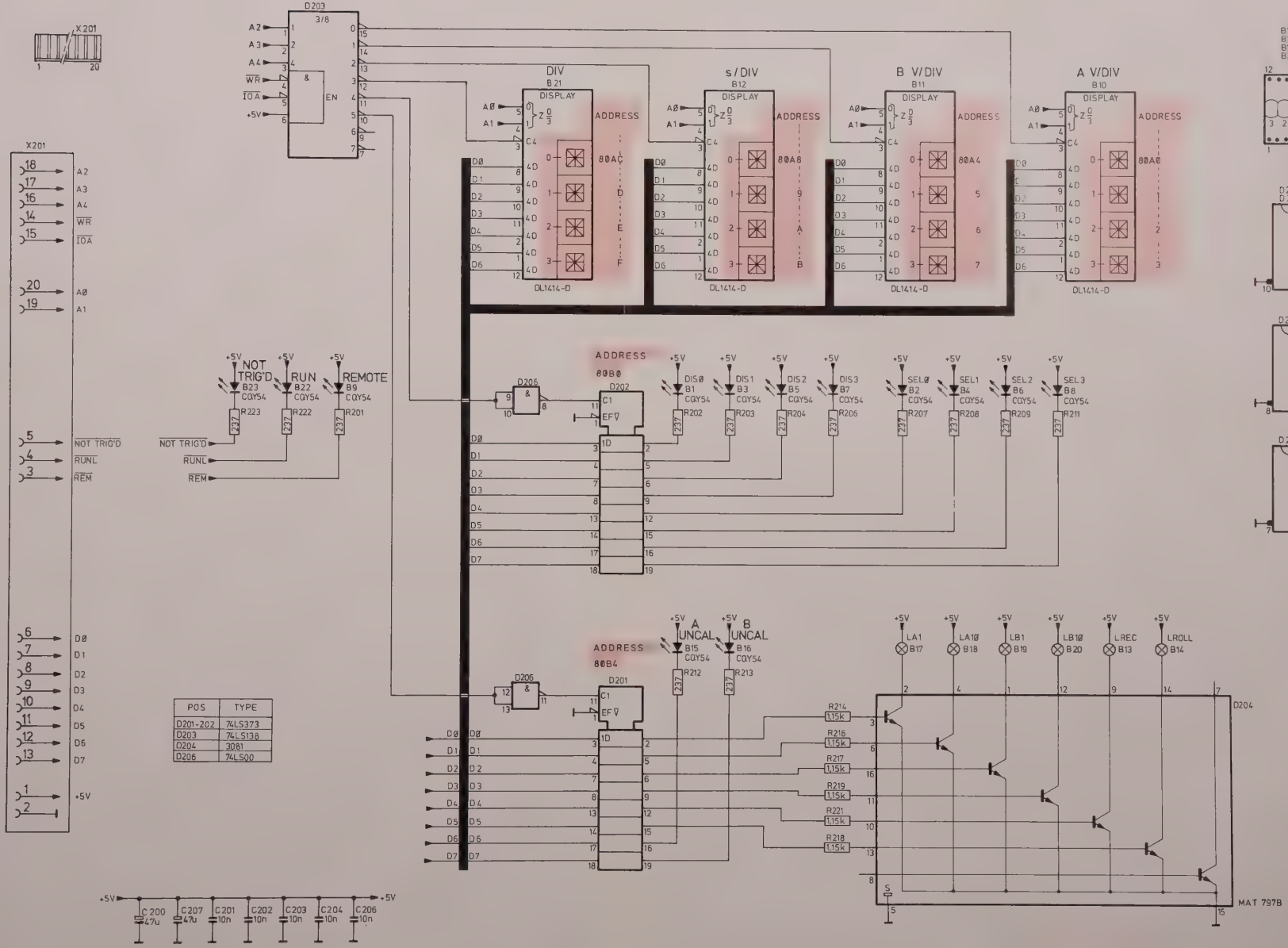

POS	TYPE
D201-202	74LS373
D203	74LS138
D204	3081
D206	74L500

Fig. 6.2.4.

Table A

YA1 D7	YA4 D6	YA5 D5	YA6 D4	YA7 D3	YA2 D2	
1	1	0	1	0	1	10 mV/div.
1	1	0	0	0	1	20 mV/div.
1	0	0	0	0	1	50 mV/div.
1	0	0	0	1	1	.1 V/div.
1	1	0	0	1	1	.2 V/div.
0	1	0	0	0	1	.5 V/div
0	1	1	0	0	1	1 V/div.
0	1	1	0	0	0	2 V/div.
0	1	0	1	0	0	5 V/div.
1	1	0	1	0	0	10 V/div.
1	1	1	0	0	0	20 V/div.
0	0	1	0	0	1	50 V/div.

Table B

YB1 D7	YB4 D6	YB5 D5	YB6 D4	YB7 D3	YB2 D2	
1	1	0	1	0	1	10 mV/div.
1	1	0	0	0	1	20 mV/div.
1	0	0	0	0	1	50 mV/div.
1	0	0	0	1	1	.1 V/div.
1	1	0	0	1	1	.2 V/div.
0	1	0	0	0	1	.5 V/div.
0	1	1	0	0	1	1 V/div.
0	1	1	0	0	0	2 V/div.
0	1	0	1	0	0	5 V/div.
1	1	0	1	0	0	10 V/div.
1	1	1	0	0	0	20 V/div.
0	0	1	0	0	1	50 V/div.

Table C

TB1 D7	TB4 D6	TB5 D5	TB6 D4	TB7 D3	TB2 D2		
1	1	0	1	0	1	5 ns/div.	RECURR.
1	1	0	0	0	1	10 ns/div.	
1	0	0	0	0	1	20 ns/div.	
1	0	0	0	1	1	50 ns/div.	
1	1	0	0	1	1	.1 µs/div.	
0	1	0	0	0	1	.2 µs/div.	
0	1	1	0	0	1	.5 µs/div.	
0	1	1	0	0	0	1 µs/div.	
0	1	0	1	0	0	2 µs/div.	
1	1	0	1	0	0	5 µs/div.	
1	1	1	0	0	0	10 µs/div.	
0	0	1	0	0	1	20 µs/div.	
0	0	1	1	1	1	50 µs/div.	
0	0	1	1	1	0	.1 ms/div.	
0	0	1	1	0	0	.2 ms/div.	
0	1	1	1	0	0	.5 ms/div.	
0	1	1	1	1	0	1 ms/div.	
0	0	0	1	1	0	2 ms/div.	
1	0	0	1	1	0	5 ms/div.	
1	0	0	0	1	0	10 ms/div.	
0	0	0	0	1	1	20 ms/div.	
0	0	1	0	1	1	50 ms/div.	
1	0	1	0	1	0	.1 s/div.	
1	0	0	1	0	0	.2 s/div.	
1	1	0	1	0	0	.5 s/div.	ROLL.
1	1	1	0	0	0	1 s/div.	
0	0	1	0	0	1	2 s/div.	
0	0	1	1	1	1	5 s/div.	
0	0	1	1	1	0	10 s/div.	
0	0	1	1	0	0	20 s/div.	
0	1	1	1	0	0	.5 min/div.	
0	1	1	1	1	0	1 min/div.	
0	0	0	1	1	0	2 min/div.	
1	0	0	1	1	0	6 min/div.	
1	0	0	0	1	0	15 min/div.	
0	0	0	0	1	1	30 min/div.	
0	0	1	0	1	1	60 min/div.	

6.2.2.2. Switchboard A202 and Switch Units A203 ... A207

The front-panel controls listed below are located on these units.

A202 switchboard

SWITCHES	Circuit ref.	Switch signals	
YA AMPL/DIV	S20	YA1 YA2 YA4 YA5 YA6 YA7	See table A
YB AMPL/DIV	S22	YB1 YB2 YB4 YB5 YB6 YB7	See table B
TB TIME/DIV	S23	TB1 TB2 TB4 TB5 TB6 TB7	See table C
INV STO1	S5	$\overline{\text{INV1}}$	
INV STO2	S6	$\overline{\text{INV2}}$	
INV STO3	S7	$\overline{\text{INV3}}$	
CAL A	S19	$\overline{\text{CALA}}$	
CAL B	S21	$\overline{\text{CALB}}$	
INV YB	S28	$\overline{\text{BIN}}$	
SERV 1	X241	$\overline{\text{SERV1}}$	
SERV 2	X241	$\overline{\text{SERV2}}$	

POTENTIOMETERS	Circuit ref.	Slider signals
X POSITION	R3	X POS
X MAGN	R2	X MAGN (+12 V in X CAL)
OFFSET A	R10/R11	OFF A
OFFSET B	R12/R13	OFF B
POS ACCU	R1	POSØ
POS STO1	R4	POS1
POS STO2	R5	POS2
POS STO3	R6	POS3
CONT A	R7	ACON
CONT B	R8	BCON

The slider signals of the above-listed potentiometers are applied to various units of the instrument via connector X259

A203 interconnection board

Provides the connection between units S201 and A202.

A204 display switch board

		Switch signals
DISPLAY ACCU	S1	$\overline{DIS\emptyset}$
DISPLAY STO1	S2	$\overline{DIS1}$
DISPLAY STO2	S3	$\overline{DIS2}$
DISPLAY STO3	S4	$\overline{DIS3}$

A 205 I *delay switch board*

UP ┐ RESET	S24	$\overline{UP}$
DIG ┘	S25	$\overline{DIG}$
DOWN	S26	$\overline{DOWN}$

A 205 II *save switch board*

SAVE STO1	S8	$\overline{SAV1}$
SAVE STO2	S9	$\overline{SAV2}$
SAVE STO3	S10	$\overline{SAV3}$

A206 clear switch board

CLEAR	S11	$\overline{CLEAR}$
WRITE	S12A	–
LOCK	S12B	$\overline{LOCK}$

A207 select switch board

SELECT	S14	$\overline{SEL}$
X=t	S15A	–
X=A/Y=B	S15B	$\overline{A/B}$
Yx1	S16A	–
Yx5	S16B	$\overline{Yx5}$
DOTS	S17	$\overline{DOTS}$
PLOT	S18	$\overline{PLOT}$

The settings of all the switches on the above units are read periodically by the microprocessor system via three groups of multiplexers, D241/D247, D242/D248, D243/D249 according to the following table:

ADDRESS		AØF	D7	D6	D5	D4	D3	D2	D1	DØ
8Ø2Ø	$\overline{RDF\emptyset}$=Ø	1	YA1	YA4	YA5	YA6	YA7	YA2	$\overline{DIG}$	$\overline{CALA}$
8Ø21	$\overline{RDF\emptyset}$=Ø	Ø	YB1	YB4	YB5	YB6	YB7	YB2	$\overline{BIN}$	$\overline{CALB}$
8Ø22	$\overline{RDF2}$=Ø	1	TB1	TB4	TB5	TB6	TB7	TB2	$\overline{UP}$	$\overline{DOWN}$
8Ø23	$\overline{RDF2}$=Ø	Ø	$\overline{DIS3}$	$\overline{DIS2}$	$\overline{DIS1}$	$\overline{DIS\emptyset}$	$\overline{INV3}$	$\overline{INV2}$	$\overline{INV1}$	FRUN
8Ø24	$\overline{RDF4}$=Ø	1	+5 V	FASA	$\overline{Yx5}$	$\overline{SEL}$	$\overline{SAV3}$	$\overline{SAV2}$	$\overline{SAV1}$	DELTRG
8Ø25	$\overline{RDF4}$=Ø	Ø	$\overline{PLOT}$	Ø V	$\overline{DOTS}$	$\overline{A/B}$	$\overline{CLEAR}$	$\overline{LOCK}$	$\overline{SERV2}$	$\overline{SERV1}$

The selection of one of the multiplexer groups and the internal setting of the selected group is made via the address selector circuit, which consists of NAND-gate D244 (11, 12, 13) and the three-to-eight decoder circuit D246, as shown in the following table:

ADDRESS	$\overline{IO2}$	A3	A2	A1	AØ	AØF
8Ø2Ø	Ø	Ø	Ø	Ø	Ø	1
8Ø21	Ø	Ø	Ø	Ø	1	Ø
8Ø22	Ø	Ø	Ø	1	Ø	1
8Ø23	Ø	Ø	Ø	1	1	Ø
8Ø24	Ø	Ø	1	Ø	Ø	1
8Ø25	Ø	Ø	1	Ø	1	Ø

INCOMING SIGNAL	OUTGOING SIGNAL	GENERATED ON UNIT	USED ON UNIT	DESCRIPTION
AØ ... A4		A4		Address bits from system address-bus
	ACON	A202	A21	Slider of channel A continuous control
	BCON	A202	A21	Slider of channel B continuous control
DØ ... D7		A4		Data bits from system data-bus
	DØ ... D7	A202	A4	Data bits to system data-bus
DELTRG		A13	A9	Delayed trigger signal
FASA		A9		Output phase flip-flop
FRUN		A13		Freerun signal
$\overline{IO2}$		A4		Input switches select } I/O address decoding signals
$\overline{IOA}$		A4		Display select } I/O address decoding signals
$\overline{NOT\ TRIG'D}$		A4		Control for NOT TRIG'D lamp
	OFFA	A202	A21	Slider of channel A OFFSET control
	OFFB	A202	A21	Slider of channel B OFFSET control
	POSØ	A202	A20	Slider of ACCU position control
	POS1	A202	A20	Slider of STO1 position control
	POS2	A202	A20	Slider of STO2 position control
	POS3	A202	A20	Slider of STO3 position control
$\overline{REM}$		A4		Control for REMOTE lamp
$\overline{RUNL}$		A4		Control for RUN lamp
$\overline{RD}$		A4		Signal READ from microprocessor
$\overline{WR}$		A4		Signal WRITE from microprocessor
	XMAG	A202	A20	Slider of XMAGN control
	XPOS	A202	A20	Slider of X POSITION control
+5 V		A15		
−12 K		A15		
+12 K		A15		
−12 L		A15		
+12 L		A15		
⏚		A15		

TEST POINTS	
X248	DØ
X249	D1
X251	D4
X252	D5

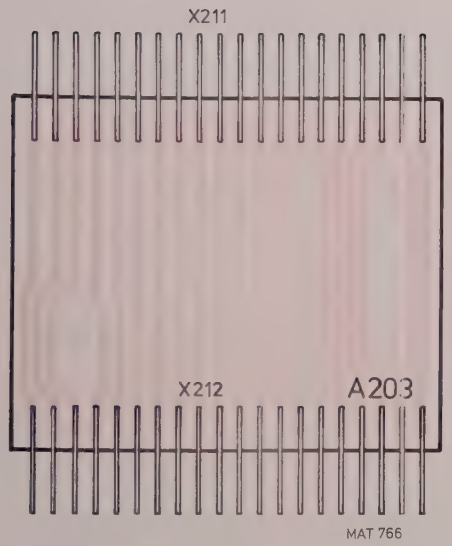

INTERCONNECTION BOARD

Fig. 6.2.5.

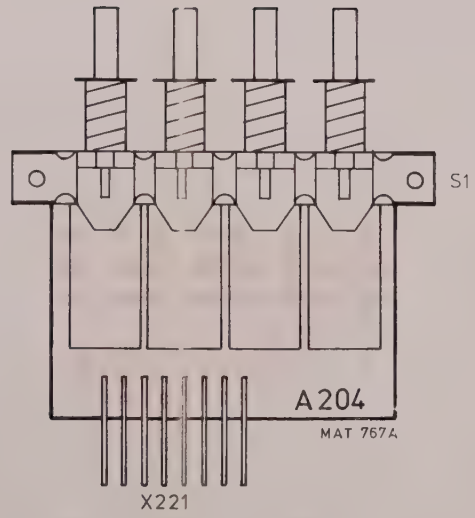

DISPLAY SWITCH BOARD

Fig. 6.2.6.

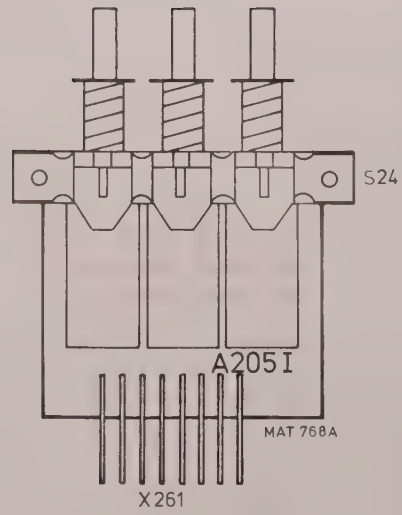

DELAY SWITCH BOARD

Fig. 6.2.7.

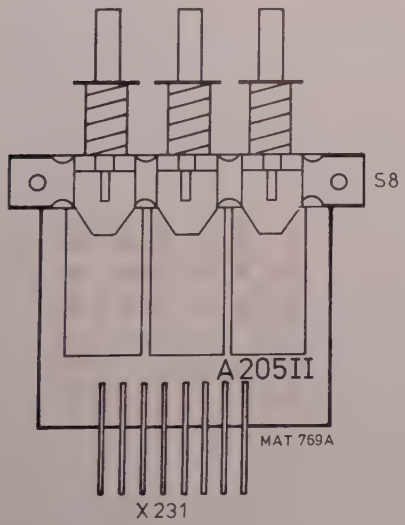

SAVE SWITCH BOARD

Fig. 6.2.8.

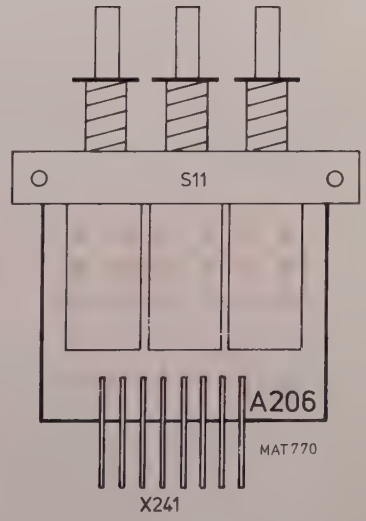

CLEAR SWITCH BOARD

Fig. 6.2.9.

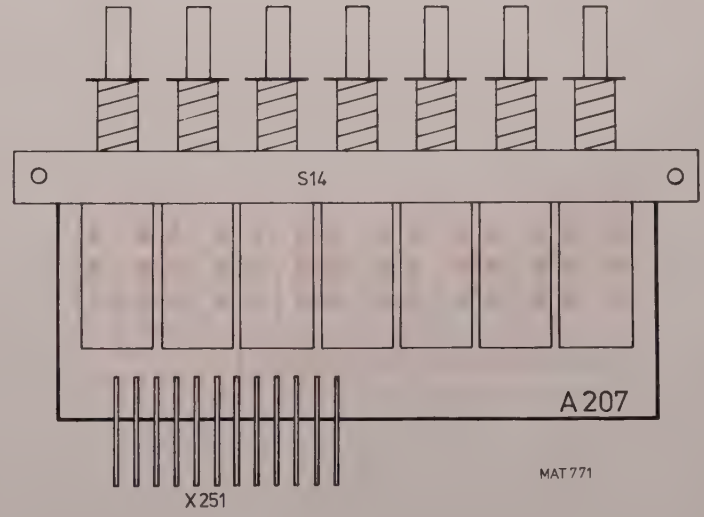

SCALE SWITCH BOARD

Fig. 6.2.10.

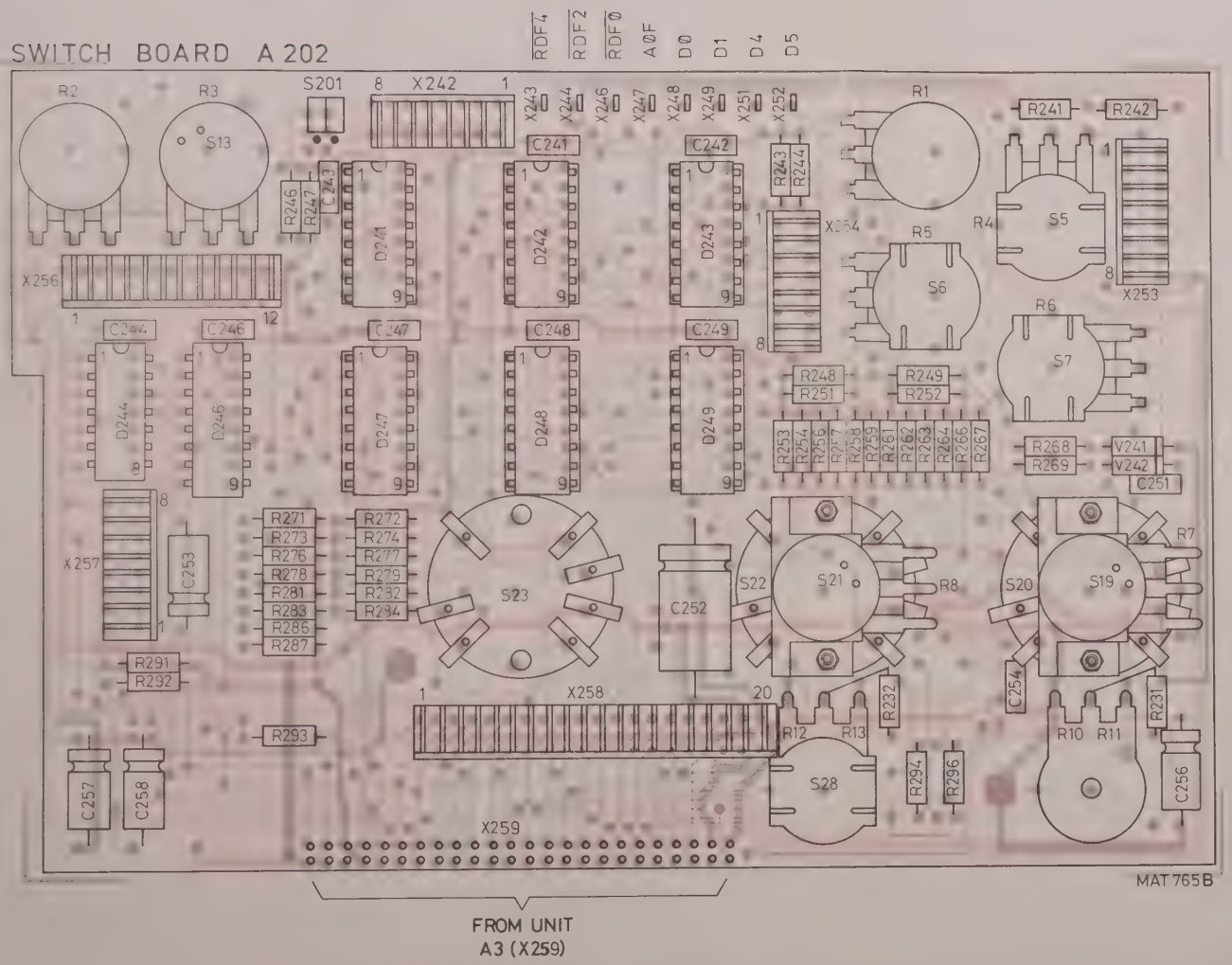
SWITCH BOARD A 202
RDF4
RDF2
RDF0
A0F
D0
D1
D4
D5
R2
R3
S13
S201
X242
X243
X244
X246
X247
X248
X249
X251
X252
R1
R241
R242
C241
C242
R243
R244
R246
R247
C243
D241
D242
D243
X254
R5
S6
R4
S5
X253
X256
R6
S7
C244
C246
C247
C248
C249
D244
D246
D247
D248
D249
R248
R251
R249
R252
R253
R254
R256
R257
R258
R259
R261
R262
R263
R264
R266
R267
R268
R269
V241
V242
C251
X257
C253
R271
R273
R276
R278
R281
R283
R286
R287
R272
R274
R277
R279
R282
R284
S23
C252
S22
S21
R8
S20
S19
R7
R291
R292
X258
R293
R12
R13
R232
C254
R10
R11
R231
C257
C258
S28
R294
R296
C256
X259
MAT 765B
FROM UNIT
A3 (X259)

Fig. 6.2.11.

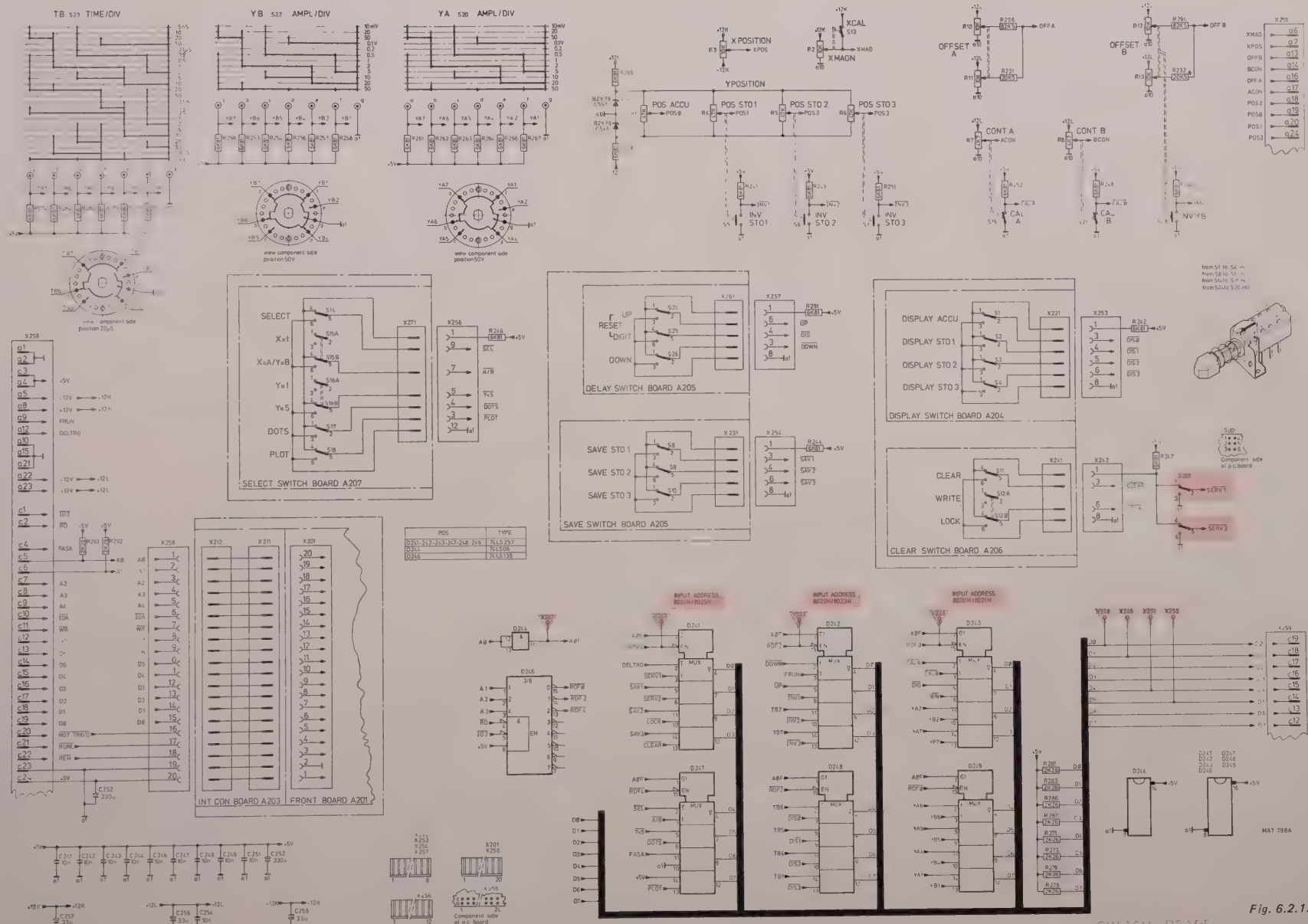

POS	TYPE
D241-242-243-247-248-249	74LS257
D244	74LS08
D246	74LS138

Fig. 6.2.12.

6.2.3. Motherboard unit A3

The motherboard unit is installed to interconnect the various plug-in units.
No components are mounted on this board.

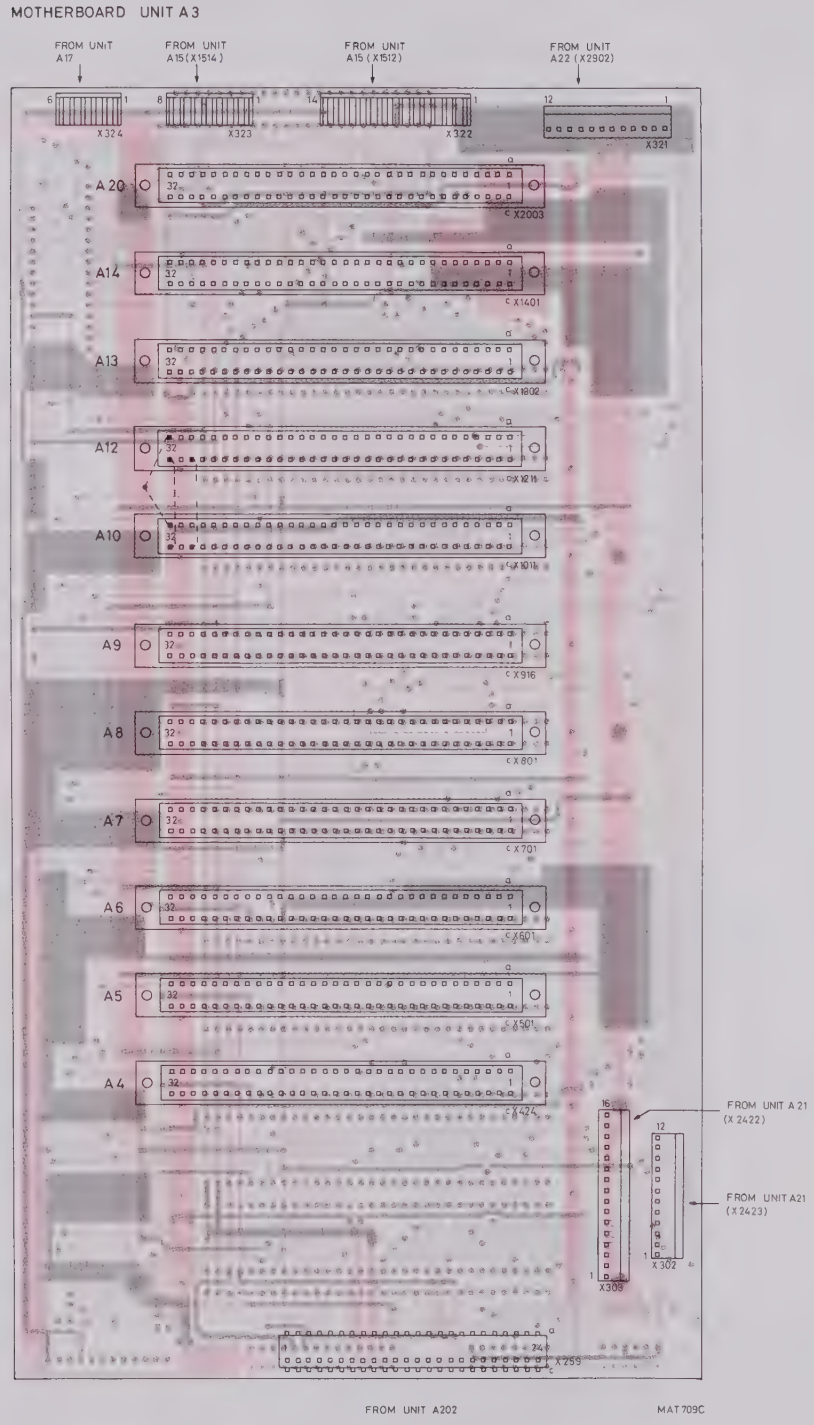

Fig. 6.2.13.

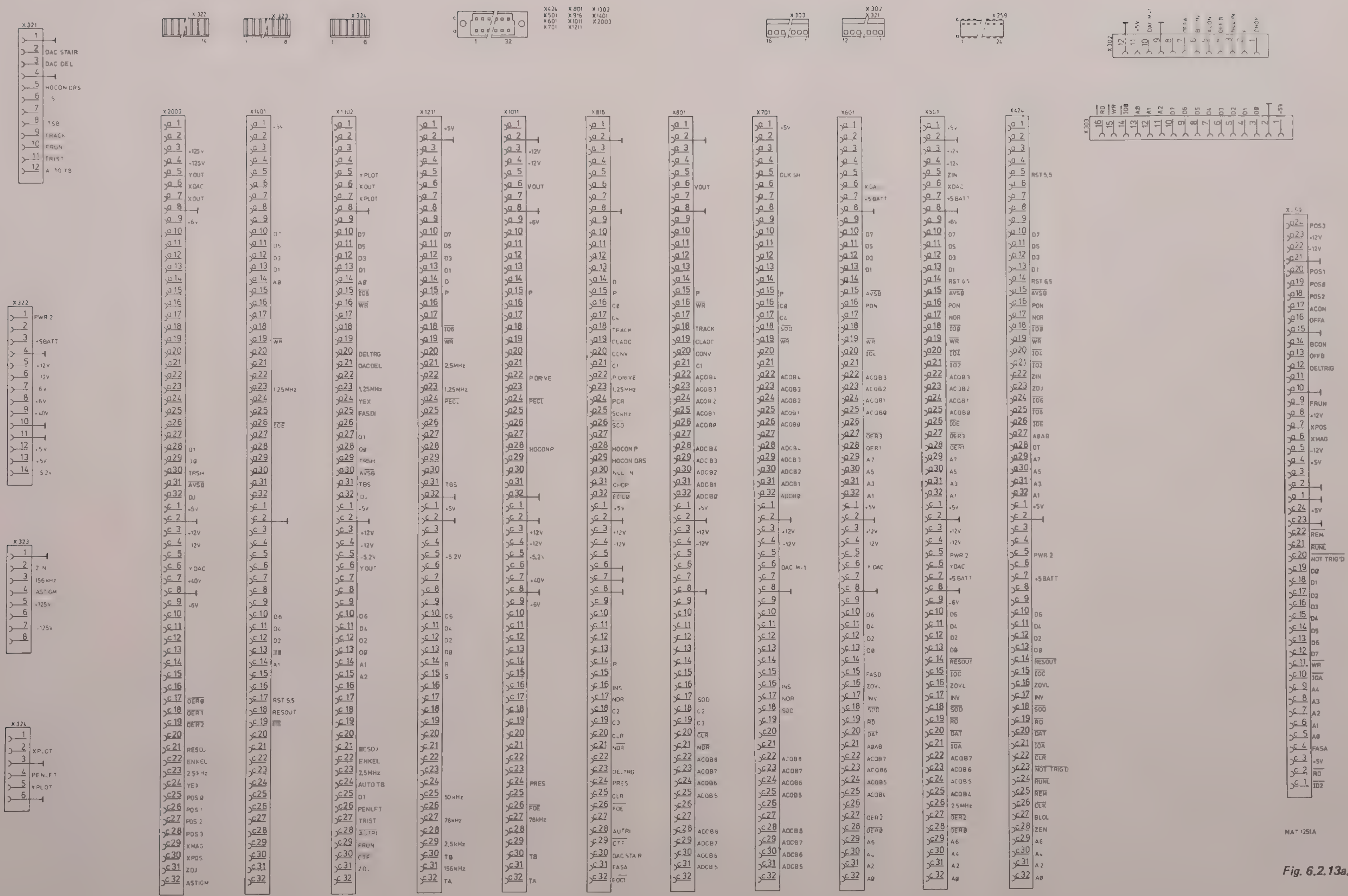

Fig. 6.2.13a.

6.2.4. Microprocessor unit A4

6.2.4.1. General

As shown in the simplified block diagram, the microprocessor unit basically consists of the following circuit elements:

- A microprocessor integrated circuit block for controlling and organising data flow.
- Erasable and programmable read-only memories (EPROMs) for system programming.
- Random-access memories (RAMs) for stacking and storing the variable data.
- Address and data selection latches for the multiplexed address bus.
- Decoders for RAM and ROM selection and address decoding.
- Trap and watchdog circuits to guard against loss of data.
- Two-way buffer circuit to the system data-bus.
- A blanking circuit for the c.r.t.

The heart of the microprocessor unit is integrated circuit D408, an 8-bit microprocessor type 8085 with 16 address lines.
The first eight address lines AØ ... A7 are multiplexed with the eight data lines DØ ... D7 and are defined as ADØ ... AD7. Addressing is selected by the ALE (address latch enable) signal from the microprocessor, which gives an external indication when address information is on the bus-lines.

6.2.4.2. Trap Input Circuit

The TRAP input is effective when the battery back-up facility is used. It prevents the RAM contents being disturbed when the instrument is switched off or in the event of a power failure. The TRAP input can be regarded as a non-maskable restart input. A logic 1 level on this input forces the microprocessor to continue with the execution of the program starting at address ØØ24H, the starting address of the POWER DOWN routine.

The signal PWR (power), a 50Hz sinewave signal generated on the power supply unit, is converted to a 50Hz squarewave voltage on pin 3 of Schmitt trigger D426 and integrated by C437/R412 to provide pulses on input 11 of the retriggerable one-shot D424.

During the initial switching-on of the power supply, a low voltage on reset input 13 of the one-shot holds the circuit in its reset state. When the power supply is started, however, the retriggerable one-shot switches over and signal PON (power on) goes to logic 1. As long as pulses are generated on input 12, the one-shot will remain in this state.

Failure of the power supply, i.e. no control pulses on input 11, causes the one-shot to be reset and thus activate the TRAP input of the microprocessor.
For test procedures, the circuit can be isolated by unsoldering the spot on the printed-circuit track.

6.2.4.3. CLOCK inputs X_1 and X_2

A 5 MHz crystal, B401, is connected to the clock inputs X_1 and X_2 of the microprocessor to provide an accurate timing reference source.

6.2.4.4. $\overline{\text{RESIN}}$ input and WATCHDOG Circuit

A reset signal is generated when the instrument is switched ON. This reset signal forces the microprocessor to start the execution of the main program beginning at the address ØØØØH.

The retriggerable one-shot D424 is initially reset by input pin 3 (R) during the switching-on of the instrument. After switching on, the one-shot is set to the logic 1 state by the DT (display timing) pulses from the display timing flip-flop D409, pin 9 on this p.c. board, applied to D424-5.

The one-shot remains in this state as long as the system continues to generate DT pulses.

If these pulses are interrupted, the circuit functions as a watchdog and resets the microprocessor. The one-shot will in fact be reset to logic 0 and a 1 Hz Schmitt oscillator consisting of C432/V402/R421 and D426 will switch the $\overline{\text{RESIN}}$ input of the microprocessor between logic 0 and logic 1.

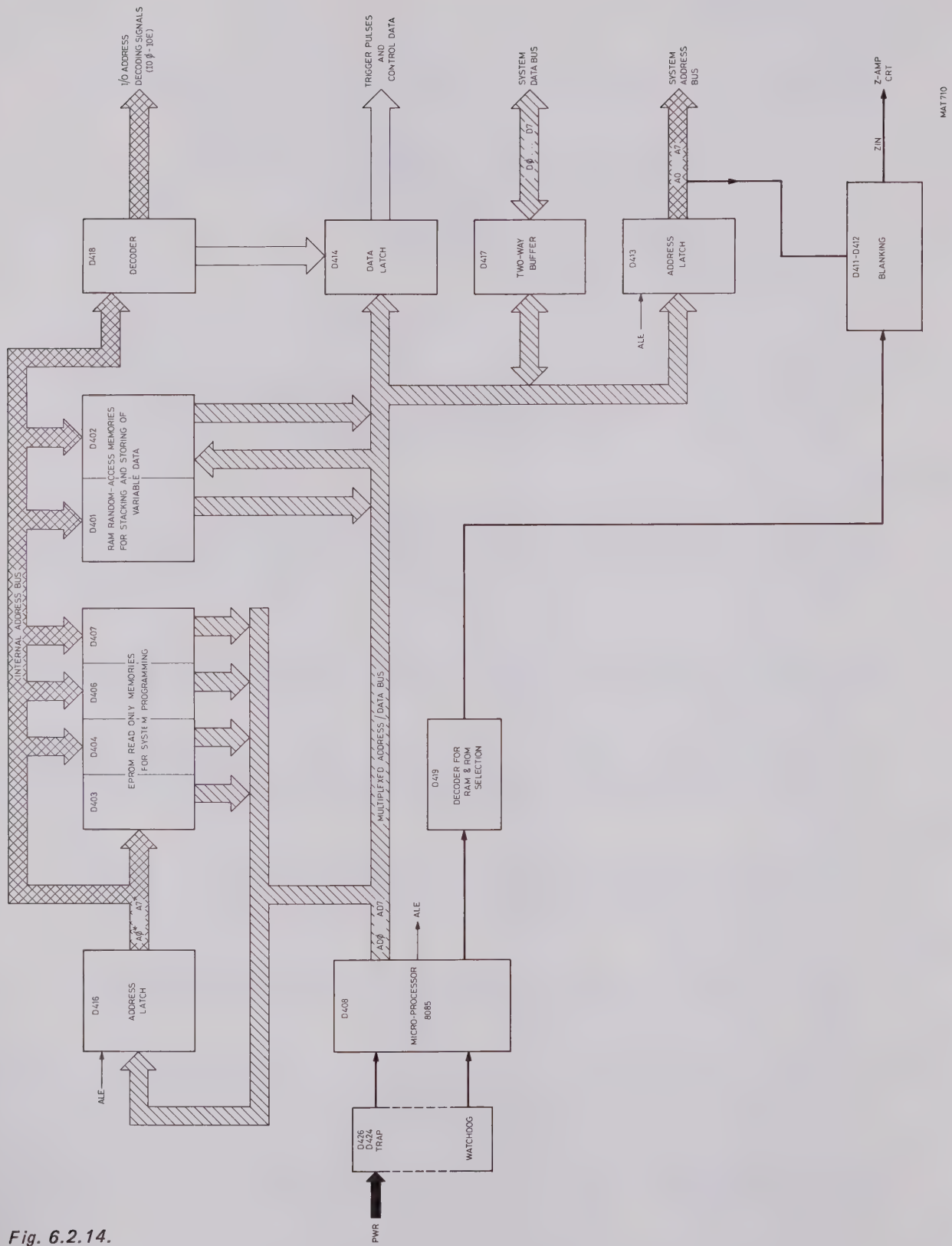
I/O ADDRESS DECODING SIGNALS (10 ϕ - 10E)
TRIGGER PULSES AND CONTROL DATA
SYSTEM DATA BUS
SYSTEM ADDRESS BUS
Z-AMP CRT
Z IN
MAT 710
D418 DECODER
D414 DATA LATCH
D417 TWO-WAY BUFFER
D413 ADDRESS LATCH
D411-D412 BLANKING
ALE
D402
D401 RAM RANDOM-ACCESS MEMORIES FOR STACKING AND STORING OF VARIABLE DATA
INTERNAL ADDRESS BUS
D407
D406
D404
D403 EPROM READ ONLY MEMORIES FOR SYSTEM PROGRAMMING
MULTIPLEXED ADDRESS / DATA BUS
D419 DECODER FOR RAM & ROM SELECTION
D416 ADDRESS LATCH
D408 MICRO-PROCESSOR 8085
D426 D424 TRAP
WATCHDOG
PWR

Fig. 6.2.14.

This reset process continues unless the program resumes correct running.

For test purposes, the watchdog circuit can be replaced by a fixed reset circuit by soldering the spot on the printed-circuit track.

6.2.4.5. RST 7.5 – RST 6.5 – RST 5.5 inputs

These restart inputs to the microprocessor force it to continue the program on defined addresses, from where it can jump to different programs.

RESTART INPUTS	PRIORITY	RESTART ADDRESS	REMARKS
RS 7.5	Highest	ØØ3CH	Not used in standard instruments (can eventually be used for test purposes)
RS 6.5		ØØ34H	Not used in standard instruments (connected to 'SPARE' connector)
RS 5.5	Lowest	ØØ2CH	Used by IEC-bus interface option

6.2.4.6. SID (Serial data input)

The microprocessor will receive the information NDR (new data ready) on the SID input.

6.2.4.7. READY input

Via this input, additional WAIT states are generated to double the $\overline{RD}$* and $\overline{WR}$* pulse duration. This is necessary to provide correct adaption between the microprocessor and the slower acting data RAM circuits.
The length of the signals $\overline{RD}$* and $\overline{WR}$* is doubled by flip-flop D423 only when signal $\overline{DAT}$ is logic 0.
The output of this flip-flop D423 is connected to the microprocessor READY input to indicate the end of the wait time.

6.2.4.8. Connection to the system address bus

The first eight address bits placed by the microprocessor on the multiplexed address-data bus lines ADØ ... AD7 have to be separated from the eight data bits. This separation is achieved by address latch D413, which is enabled by signal ALE.
The group of output signals AØ ... A7 constitute the system address bus.

6.2.4.9. Connection to the system data-bus

The eight data bits placed by the microprocessor on the multiplexed address-data bus lines ADØ ... AD7 have to be separated from the first eight address bits.
This separation is done by the bidirectional buffer D417.
This buffer is selected if address line A15 is logic 1 (as in I/O and DATA part of the memory map).
Input or output data depends on the logic level of signal RD*.

RD* = logic 1 means OUTPUT
RD* = logic 0 means INPUT

Data is transported between the D417 in- and outputs and the system data-bus over the lines DØ ... D7.

SYSTEM MEMORY MAP

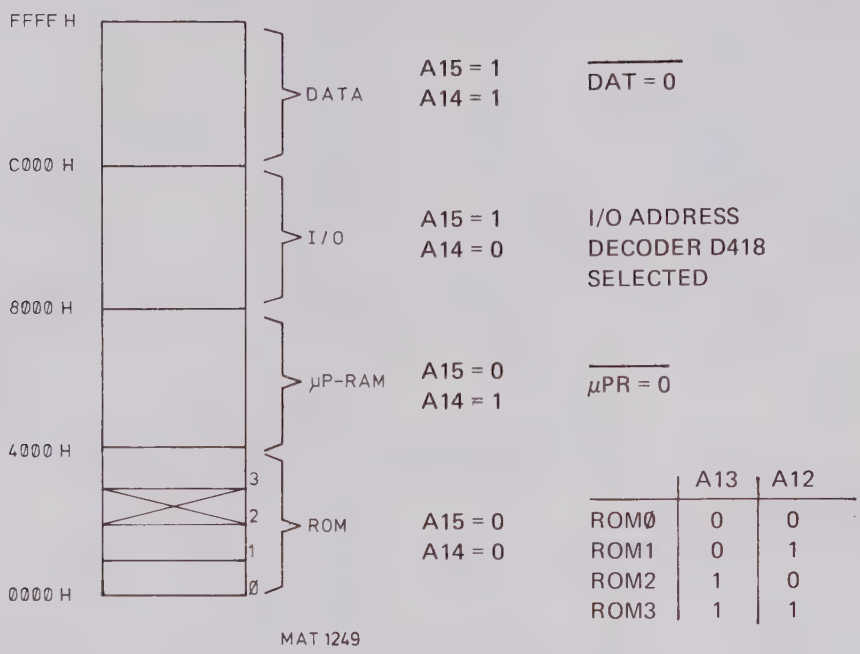

Fig. 6.2.15.

ADDRESS DECODING

6.2.4.10. ROM - µP/RAM - I/O - DATA selection

In decoder D419, four select signals are generated as follows:

A15	A14	OUTPUT SIGNAL
0	0	ROM selection to pin 15 - D419
0	1	µPRAM selection signal $\overline{UPR}$
1	0	I/O selection signal (not used)
1	1	DATA SELECTION SIGNAL $\overline{DAT}$

ROM chip select signals ROMØ ... ROM3

A15	A14	A13	A12	OUTPUT SIGNAL	ADDRESSES
0	0	0	0	$\overline{ROMØ}$	ØØØØ - Ø7FF
0	0	0	1	$\overline{ROM1}$	1ØØØ - 17FF
0	0	1	0	$\overline{ROM2}$	2ØØØ - 27FF
0	0	1	1	$\overline{ROM3}$	3ØØØ - 37FF

I/O select signals $\overline{IOØ}$ ... $\overline{IOE}$.

The three-bit decoder D418 decodes the address bits A15, A14, A7*, A6* and A5* into the eight address decoding signals $\overline{IOØ}$ ... $\overline{IOE}$. Each of these signals represent a group of addresses as shown in the table. The signals are used in various circuits of the instrument.

A15	A14	A7*	A6*	A5*	OUTPUT SIGNAL	ADDRESSES	TO UNIT
1	0	0	0	0	$\overline{IO0}$	8000 - 801F	A21 AMPLIFIER
1	0	0	0	1	$\overline{IO2}$	8020 - 803F	A2-A4 SWITCHES + µP
1	0	0	1	0	$\overline{IO4}$	8040 - 805F	A6 RAM
1	0	0	1	1	$\overline{IO6}$	8060 - 807F	A12 TIME-BASE
1	0	1	0	0	$\overline{IO8}$	8080 - 809F	A13 TRIGGER DELAY
1	0	1	0	1	$\overline{IOA}$	80A0 - 80BF	A2 DISPLAY
1	0	1	1	0	$\overline{IOC}$	80C0 - 80DF	NOT USED
1	0	1	1	1	$\overline{IOE}$	80E0 - 80FF	A14 IEC OPTION

ROM MEMORY

The ROM (read-only memory), which contains the system program, consists of the two EPROM chips D403 - D404 and 4K-bytes each (4096X 8 bits).

Because the microprocessor's first eight address lines AD0 ... AD7 are multiplexed in the microprocessor with the data lines, the addresses have to be latched by the address latch D416 with the aid of the ALE signal. The ALE signal enables the latching of the A0* ... A7* signals. These A0* ... A7* signals are placed on the microprocessor board internal address bus.

Each ROM memory address can be selected by the address lines A0* ... A7* together with address lines A8 - A9 - A10 and A11.

Each ROM memory chip is selected by the read signal $\overline{RD}$* and the relevant ROM selection signal $\overline{ROM0}$, $\overline{ROM1}$, $\overline{ROM2}$ or $\overline{ROM3}$.

When a certain ROM address is selected in this way, the contents of the selected location are placed on the multiplexed address-data bus lines AD0 ... AD7.

µP-RAM MEMORY

The µP-RAM (microprocessor random access memory) is used by the microprocessor for stack purposes and for storage of variable data.
It consists of two RAM chips D401 - D402 of ¼K-nibbles each (256 x 4 bits), which means that a maximum of 256 bytes of data can be stored.

Each µP-RAM memory address can be selected by the address lines A0* ... A7*.
The two chips are selected by the signal combination PON.UPR.

Reading the RAM contents or writing data into a RAM location is controlled by the signals $\overline{RD}$* and $\overline{WR}$*.

The data to be written into, or read from the RAM memory is transported via the multiplexed address-data bus AD0 ... AD7.

DATA LATCH D414

When the microprocessor places the address 8020 on the multiplexed address data bus, this results in signal $\overline{IO2}$ going to logic 0. This $\overline{IO2}$ combined with the $\overline{WR}$ signal on gate D421 enables data latch D414 to latch the byte of data present on the multiplexed address data-bus.

The byte of data consists of the following signals:

BIT 0	$\overline{CLR}$	Clear signal for clearing the shift register
BIT 1	$\overline{REM}$	Control signal for REMOTE lamp
BIT 2	$\overline{NOT\ TRIG'D}$	Control signal for NOT TRIG'D lamp
BIT 3	$\overline{ZEN}$	Z enable signal
BIT 4	$\overline{RUNL}$	Control signal for RUN lamp
BIT 5	BLOL	Blinking overload signal
BIT 6	INV	Invert signal for RAM output data
BIT 7	CLDT	Clear display timing flip-flop

BLANKING CIRCUIT

This circuit provides for a blanking signal ZIN (Z-amplifier input) for blanking the trace on the c.r.t. display.

ZIN = logic 1 means blanking.

The trace on the c.r.t. display is only present if all the input signals of NAND circuit D411 are logic 1 at the same time.

– pin 4 The signal ZEN is only present during the time that a selected memory (ACCU, STO1, STO 2 or STO3) is displayed.

– pin 11 If an overflow is detected on the RAM unit the short signal ZOVL (Z-overflow), will be latched in a D-type flip-flop D423 with the clock signal DAT.WR.
As the output signal of the flip-flop is connected to OR circuit D421, the blinking overload signal is passed to pin 11 of the NAND D411, resulting in blinking of the trace at a low frequency.

– pin 3 In mode DOTS, the ZDJ (Z dot join) blinking signal will be active.

– pin 5 Signal DT (display timing) blanks the trace when no memory contents (ACCU, STO1, STO2 or STO3) are displayed. Signal DT is derived from the addresses, which are also applied to the XDAC for horizontal deflection.

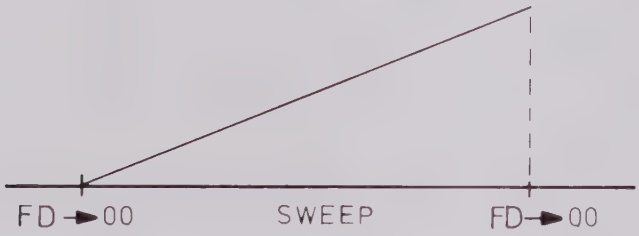

NAND circuit D412 detects the address FDH on the first eight address lines.
The output signal indicates the beginning and the end of a sweep by going to logic 1 level. This signal is latched in D-type flip-flop D409 with the clock signal DAT.WR, resulting in a signal DT.
The trace is blanked if DT = logic 0. Flip-flop D409 can be reset by signal CLDT (clear display timing flip-flop) resulting in a blanked trace.

– pin 1 In mode X = A/Y = B (A versus B – AVSB)
a signal ZAB is generated on output pin 5 of flip-flop D409.
Data can only be latched in this flip-flop on clock signal DAT.WR.
This data is derived from signal AØAB.
(AØAB is address AØ in mode X = A/Y = B)

TRIGGER PULSES FOR TEST PURPOSES

Trigger pulse 'START MAINLOOP' is available at X407
Trigger pulse "START DISPLAY LOOP" is available at X409
Trigger pulse 'START DELAY LOOP' is available at X412

INCOMING SIGNAL	OUTGOING SIGNAL	GENERATED ON UNIT	USED ON UNIT	DESCRIPTION	
	A0 ... A7	A4		Address bits from system address bits	
A0AB		A6		Address bit A0 in X = A/Y = B mode	
AVSB		A13	A6	Logic 0 in X = A/Y = B mode	
	BLOL	A4		Blinking overload	
	CLK	A4		Microprocessor clock pulse output signal (2,5 MHz)	
	CLR	A4	A8–A9	Clear signal for shift register	
D0 ... D7	D0 ... D7	A4-A6		Data bits from system data-bus	
	DAT	A4	A6	Data selection	
	DT	A4	A13	Display timing	
	INV	A4	A6	Signal invert	
	IO0	A4	A21	Input switches select amplifier settings (A21)	I/O address decoding signals.
	IO2	A4	A202	Input switches select (A2) Output port select (A4)	
	IO4	A4	A6	Data RAM select (A6)	
	IO6	A4	A12	Time-base select (A12)	
	IO8	A4	A13	Delay trigger unit settings (A13)	
	IOA	A4	A201/A202	Display select (A2)	
	IOC	A4	NOT USED		
	IOE	A4	A14		
NDR		A9		New data ready	
	NOT TRIG'D	A4	A201/A202	Control for NOT TRIG'D lamp	
	PON	A4	A6	Power on	
PWR		A15		Power signal (20 kHz)	
	RD	A4		Signal READ from microprocessor	
	REM	A4	A201/A202	Control for REMOTE lamp	
	RESOUT	A4	A14	Microprocessor RESET OUTPUT signal	
RST5,5		A14		Restart 5,5 input from IEC-bus interface	
RST6,5		A5		Restart 6,5 input (not used)	
	RUNL	A4	A201/A202	Control for RUN lamp	
	SOD	A4	A6–7–9	Microprocessor serial output data	
	WR	A4		Signal WRITE from microprocessor	
ZDJ		A13		Z dot join	
	ZEN	A4		Z enable	
	ZIN	A4	A15	Z input	
ZOVL		A6		Z overflow signal	
+5 V		A15			
		A15			
+5 BATT		A15			

TEST POINTS	
X401	D421-pin 6 (WR.DAT)
X402	PON
X403	$\overline{\text{UPR}}$
X404	DT
X406	$\overline{\text{ROMØ}}$
X407	$\overline{\text{REM}}$
X408	$\overline{\text{ROM1}}$
X409	$\overline{\text{RUNL}}$
X411	$\overline{\text{ROM2}}$
X412	$\overline{\text{NOT TRIG'D}}$
X413	$\overline{\text{ROM3}}$
X414	ALE
X416	A15
X417	NDR
X418	SOD
X419	$\overline{\text{RD}}$*
X421	CLK (OUT)
X422	$\overline{\text{WR}}$*
X423	▬

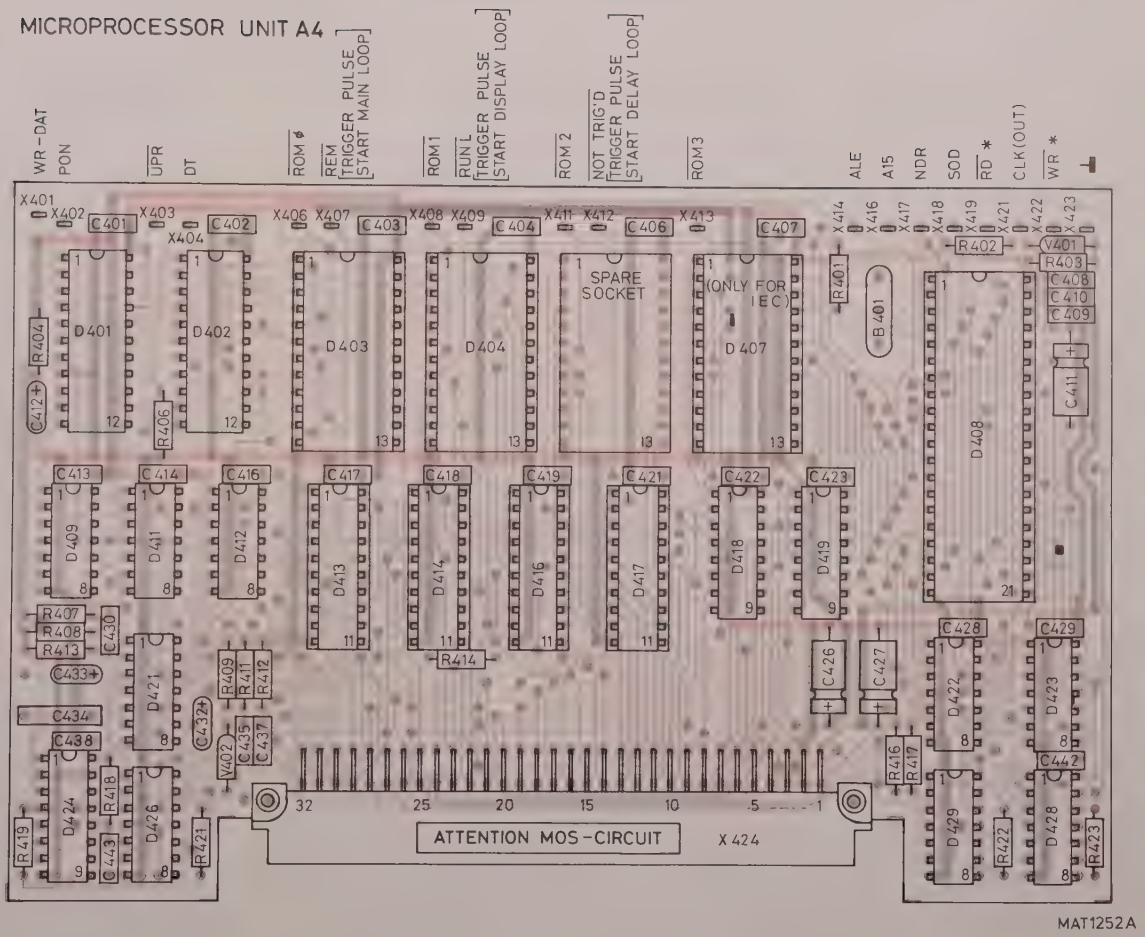
MICROPROCESSOR UNIT A4
WR-DAT
PON
UPR
DT
ROM ø
REM
TRIGGER PULSE
START MAIN LOOP
ROM1
RUN L
TRIGGER PULSE
START DISPLAY LOOP
ROM 2
NOT TRIG'D
TRIGGER PULSE
START DELAY LOOP
ROM3
ALE
A15
NDR
SOD
RD *
CLK(OUT)
WR *
SPARE SOCKET
(ONLY FOR IEC)
ATTENTION MOS-CIRCUIT
X424
MAT1252A

Fig. 6.2.16.

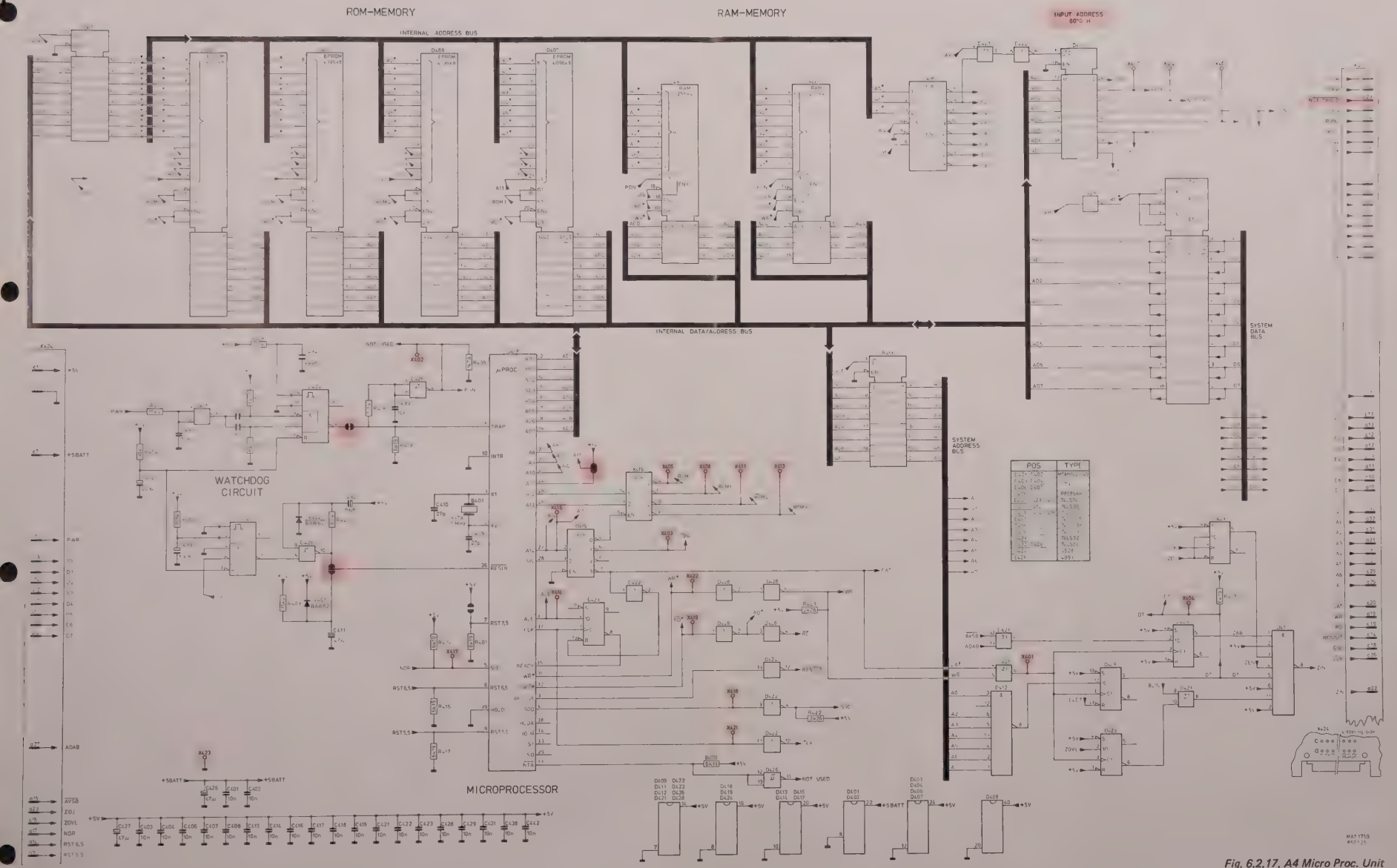

Fig. 6.2.17. A4 Micro Proc. Unit

6.2.5. Trigger control unit A5

This unit is switched between the trigger controls at the front panel and the trigger circuits at the trigger unit A22.
All trigger functions are fully remote controlable.
These functions are:

- Trigger source: A, B, EXT, and LINE.
- Trigger mode/coupling: DC, AC, AUTO and TVF.
- Level potentiometer.

6.2.5.1. Trigger source and trigger mode/coupling (fig. 6.2.5.1.).

To control the trigger source circuitry at trigger unit A22 the following four signals are required: A, B, EXT and LINE. These signals are active at a level of −12V. To read the switches we need a TTL level, so level adaption is required.
In order to save interconnections only three signals are picked-off from the switches: B, EXT and LINE. The A signal can be decoded out of these three signals.
The trigger mode/coupling signals are already at TTL level and are applied together with the trigger mode signals to two circuits:

1. To a buffer which is controlled by the signal Read SWitch.
   When the signal Read SWitch is active the actual setting of the trigger switches is read in by the μ- processor system via the databus.
2. To a multiplexer which is controlled by the signal REMote.
   When the signal REMote is not active the signals are switched through the multiplexer and applied partly via the level adaption and decoding to trigger unit A22.
   When the signal REMote is active, the buffered information from the databus, obtained after that the signal Write SWitch has been active, is switched through the multiplexer and also partly via the level adaption and decoding applied to trigger unit A22.

The output signals of the level adaption circuit are now A', B', EXT' and LINE'. Directly from the multiplexers the signal SLOPE', AUTO TB', DC', TV' and OH' are applied to trigger unit A22.

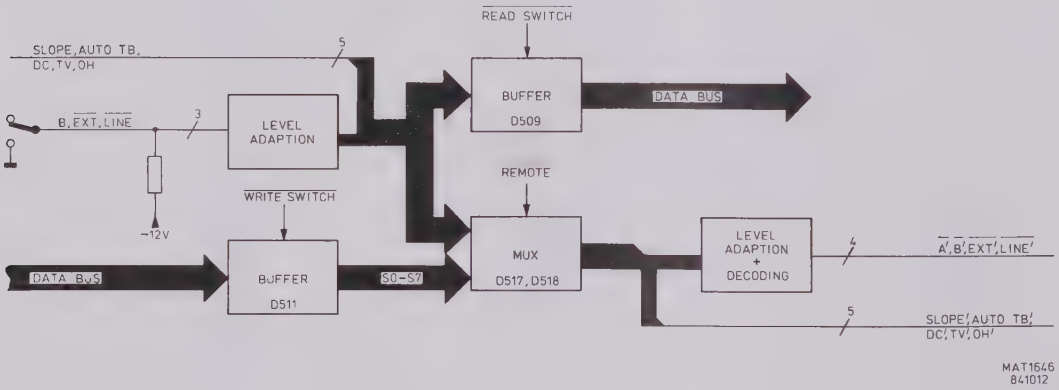

Fig. 6.2.5.1.

6.2.5.2. Level potentiometer (Fig. 6.2.5.2.)

The trigger level control is the only potentiometer on the front panel of which the value can be read out via the μ-processor system.
To make this possible, the analog output voltage of the slider of the potentiometer has to be digitized.
For this reason the slider voltage is applied to a comparator (1/4 D521). To the other input of this comparator, the output voltage of a Digital to Analog Convertor is connected.
When the inputs of the comparator are not equal the output of the comparator gets active.
This output signal of the comparator is applied to the control input of three up/down counters. The 1.25 MHz clock input of these counters is derived from the X-tal frequency of the μ-processor system.
The outputs of the three counters are applied to a twelve bit DAC, only if the signal REMote is not active.
This DAC converts the digital value into an analog one and that is on its turn applied to the comparator, to compare it with the trigger level voltage. An UP/DOWN signal is the result of the comparisation, and the loop is closed.
The most significant 8 bits at the output of the multiplexer are routed to a buffer circuit which is controlled by the signal Read TRigger Level. When this signal is active, the actual trigger level is read by the μ-processor system.
In case that the REMote signal gets active and the trigger level is not changed by means of the Write TRigger Level signal, the output of the multiplexer remains steady and the trigger level is fixed now.
When the signal WRite TRigger Level is active, the trigger level can be set via the databus. This mode is only possible in REMote control condition.
The four least significant input bits of the DAC are connected to zero level, because the databus is only 8 bits wide and the DAC requires 12 bits.
This 12 bit DAC is necessary to reach a suitable resolution in the manual mode. For remote control purposes 8 bits are sufficient for the level setting.

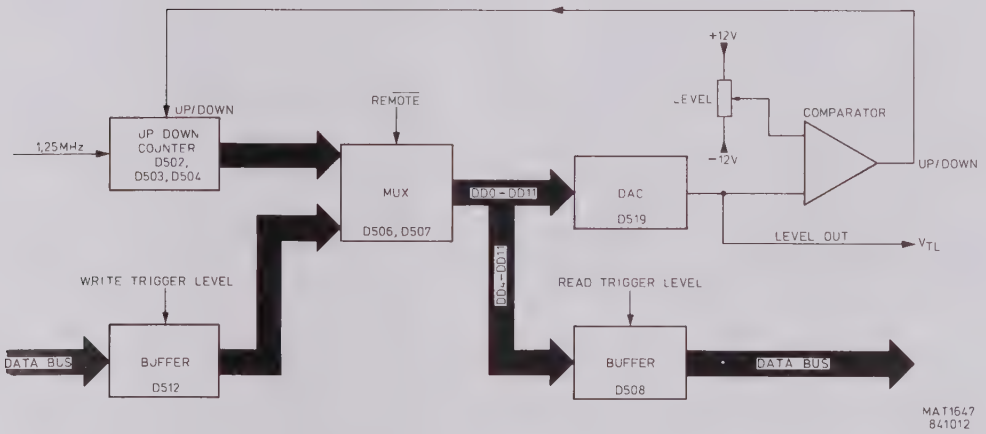

Fig. 6.2.5.2.

INCOMING SIGNAL	OUTGOING SIGNAL	GENERATED ON UNIT	USED ON UNIT	DESCRIPTION
AØ		A4		Address bit AØ
A1		A4		Address bit A1
$\overline{IOC}$		A4		Address decoding signal
$\overline{WR}$		A4		Signal WRITE
$\overline{RD}$		A4		Signal READ
DØ .. D7	D0 .. D7	A4		Data bits (system data-bus)
$\overline{B}$		A22		Channel B trigger selection
$\overline{LINE}$		A22		LINE trigger selection
$\overline{EXT}$		A22		EXT trigger selection
Vo		Front		Slider voltage LEVEL
SLOPE		Front		Positive or negative trigger
AUTO TB		Front		AUTO/AC, DC selection
DC		Front		DC/AC selection
TV		Front		TV selection
OH		Front		Internal signal
+ 5 V		A15		
+ 12 V		A15		
−12 V		A15		
− 6 V		A15		
⊥		A15		
H		Front	Front	Internal signal
V+		Front	Front	Positive voltage for LEVEL
V−		Front	Front	Negative voltage for LEVEL
⊥		Front	Front	Ground
	$\overline{A'}$	A5	A22	Channel A trigger selection
	$\overline{B'}$	A5	A22	Channel B trigger selection
	$\overline{LINE'}$	A5	A22	LINE trigger selection
	$\overline{EXT'}$	A5	A22	EXT trigger selection
	V_{TL}	A5	A22	Trigger level
	SLOPE	A5	A22	Positive or negative slope
	AUTO TB'	A5	A22	AUTO/AC, DC selection
	DC'	A5	A22	DC/AC selection
	TV'	A5	A22	TV selection
	OH'	A5	A22	Internal signal

Trigger control unit A5

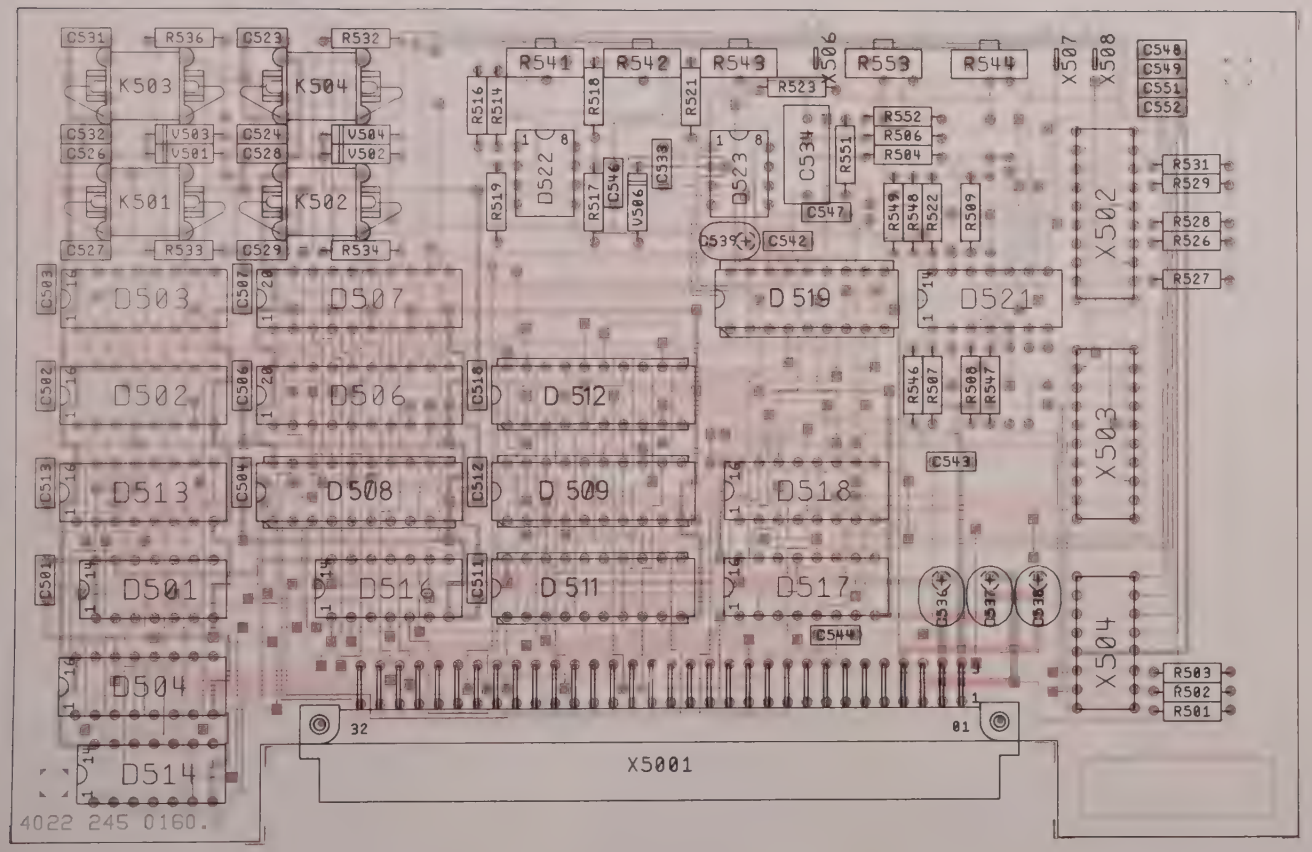

MAT 1698

Fig. 6.2.5.3.

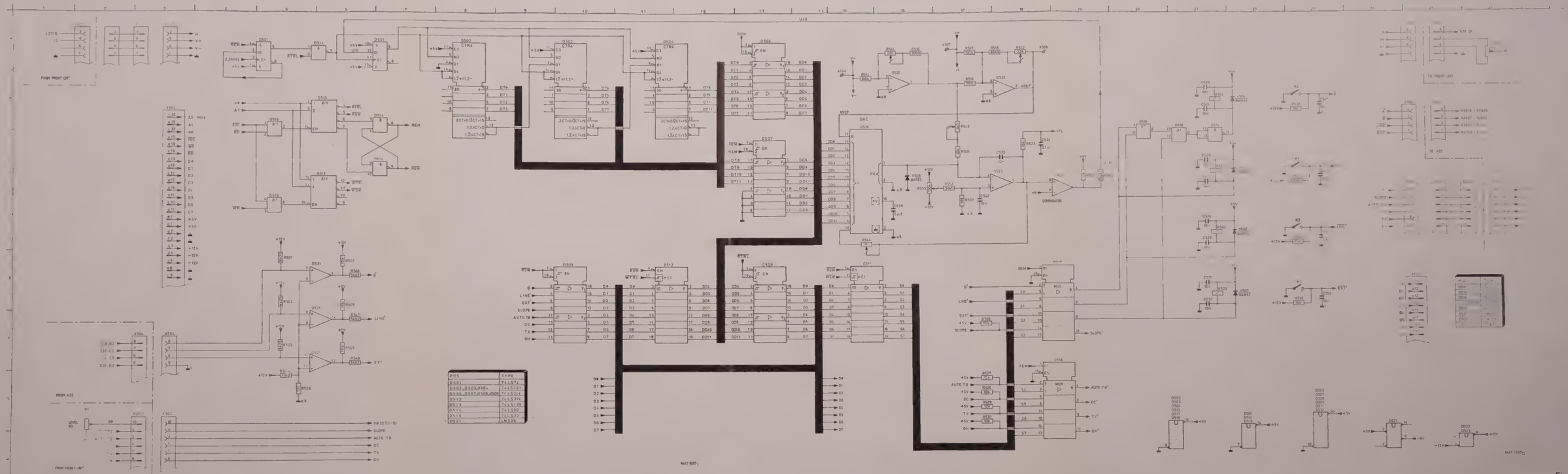

POS	TYPE
D501	74LS74
D502,D503,D504	74LS191
D506,D507,D508,D509	74LS241
D512	74LS373
D513	74LS138
D514	74LS107
D516	74LS32
D521	LM339

Fig. 6.2.5.4.

6.2.6. RAM unit A6

The RAM unit basically comprises the four random-access memories, ACCU, STO1, STO2, STO3 used for signal storage, the two digital-to-analog converters X DAC and Y DAC and their associated control circuits.

6.2.6.1. RAM memories ACCU, STO1, STO2, STO3

Each of the RAM memories consists of two RAM IC-chips of ¼K-nibbles each (256x4 bits) enabling a maximum of 256 bytes to be stored.

The overall memory is selected by PON.DAT = 1, i.e. with the power on and the data field addressed.
Memory allocation is as follows:

MEMORY	IC ELEMENTS
ACCU	D601, D602
STO1	D603, D604
STO2	D606, D607
STO3	D608, D609

Selection of one or more of the memories is made under microprocessor control.
A byte of data representing the information for reading or writing one or more of the memories is sent by the microprocessor on data-lines DØ ... D7 to the latch D613. If the signal combination WR.IO4 is logic 1, the data byte will be latched by D613.
Two groups of output signals are produced by latch D613:

Output Enable RAM signals (OER) — signals $\overline{\text{OER}}$Ø ... $\overline{\text{OER3}}$ select the memory of which the contents are required to be read.

Write Enable RAM signals (WRER) — signals $\overline{\text{WRER}}$Ø ... $\overline{\text{WRER3}}$ select the memory in which data is required to be written. With no WR signal available these signals are blocked.

Individual RAM locations are selected by address lines AØ ... A7.

Data inputs for the memories

Data received from other units can only be stored in the ACCU RAM.
Data stored in any of the other three memories STO1, STO2, STO3, is always derived from the ACCU memory.

Data for storage in the ACCU memory (D601, D602) can be:

- output data ACQBØ ... ACQB7 from the acquisition circuit,
- data from the microprocessor,
- data from the IEC-bus interface board via the system data-bus lines DØ ... D7.

The signals ACQBØ ... ACQB7 are applied to the latch D614 and the signals DØ ... D7 are applied to the latch D616.
Selection of either one of these latches is made under microprocessor control via the logic level of signal $\overline{\text{SOD}}$ (serial output data).

$\overline{\text{SOD}}$ = 1 selects D614
$\overline{\text{SOD}}$ = 0 selects D616 via inverter D626

Inverter D626 prohibits the output of data from both latches to the ACCU bit lines at the same time.

Overflow detection

The information in the RAMs is stored in 2's complement notation, which means that signal amplitudes are stored in positive as well as negative binary numbers.

maximum positive	+127	0111 1111
	⋮	⋮
	+1	0000 0001
	+0	0000 0000
	−1	1111 1111
	⋮	⋮
maximum negative	−128	1000 0000

From the above, we can see that if the most-significant bit of a binary number is at logic 0, we have a positive number, otherwise it represents a negative number.

An incorrect setting of the AMPL/DIV switch or the OFFSET control causes an overflow, which means that the result after digitising is greater than can be stored. Therefore, if the maximum number 0111 1111 or the minimum number 1000 0000 is reached, an overflow situation is recognised. This is signalled by a flashing trace on the c.r.t. display.

These two extreme overflow situations can be decoded as follows:

The most-significant bit D7 is inverted by D626 (1,2) resulting in the overflow codes 0000 0000 or 1111 1111. By comparing the inverted most-significant bit with the other seven bits in exclusive OR circuits D618 and D619, an output signal ZOVL (Z Overload) is indicated when one of these two overload situations occurs. The overflow signal ZOVL is applied to the Z-pulse (ZIN) circuit on Unit 4 to produce the flashing of the display when overload is reached.

6.2.6.2. *Digital-to-analog converters X DAC, Y DAC*

DAC output signals in X = t mode

Horizontal deflection on the c.r.t. display in the X = t mode is controlled by the addresses needed for reading the contents of the memories. Therefore, the address bits AØ ... A7 are applied to the X DAC (horizontal digital-to-analog converter) D622 to generate an analog deflection signal XDAC that varies between +5 V and −5 V.
The address bits are applied to the X DAC (D622) via two multiplexers D611 and D612, which are controlled by the signal $\overline{AVSB}$.

$\overline{AVSB}$ = 1 selects X = t mode
$\overline{AVSB}$ = 0 selects X = A / Y = B mode

Vertical deflection on the c.r.t. display is controlled by the eight data bits DØ' ... D7', which are applied to the Y DAC (D621) to generate an analog deflection signal Y DAC.
These data bits are routed to the Y DAC via eight exclusive OR gates D623, D624, which are controlled by the INV signal to invert the data when the front-panel INV switches are operated.

The X DAC and Y DAC latches can be enabled by the enable signals $\overline{X\ DACE}$ and $\overline{Y\ DACE}$ respectively. These are the output signals from the multiplexer D628, which is enabled by the $\overline{DAT}$ signal. Selection of input signals to the multiplexer is made by the signals AØAB and $\overline{AVSB}$ according to the following table:

$\overline{AVSB}$	AØAB	$\overline{XDACE}$	$\overline{YDACE}$	
0	0	WR	▬	X=A/Y=B mode
0	1	▬	WR	X=A/Y=B mode
1	0	WR	WR	X=t mode
1	1	WR	WR	X=t mode

DAC output signals in X = A/Y = B mode

If channel A as well as channel B information is stored in the RAMs, XY deflection can be obtained by selecting the X = A/Y = B mode by depressing the relevant front-panel switch.
To give XY deflection, the channel information on A and B has to be applied to the X DAC and the Y DAC respectively.
There are two different methods of storing the channel A and channel B information in the RAMs.

Channel A ODD: (FASDI = 0)	Channel A information is stored in locations with ODD addresses and channel B in locations with EVEN addresses.
Channel A EVEN: (FASDI = 1)	Channel A information is stored in locations with EVEN addresses and channel B in locations with ODD addresses.

To obtain XY deflection, it is necessary to apply data from the ODD addresses to the X DAC and data from the EVEN addresses to the Y DAC or vice versa depending on the logic level of the FASDI signal.

For correct functioning, only one DAC latch may be enabled at a time, this being controlled by the enable signals $\overline{\text{XDACE}}$ and $\overline{\text{YDACE}}$ on the output of multiplexer D628.

The logic level of signal FASDI (phase of display) controls which channel is stored in odd or even addresses by determining which DAC is loaded first. If FASDI is at logic 0, we have the situation where X DAC (latch D622) is loaded first; i.e. channel A will be stored in the odd addresses.
Alternatively, if FASDI is at logic 1, then Y DAC (latch D621) will be loaded first and channel B will be stored in the odd addresses.

FASDI	AØ	AØAB
0	0	1
0	1	0
1	0	0
1	1	1

FASDI = 0 results in AØ being inverted
FASDI = 1 results in AØ not inverted

INCOMING SIGNAL	OUTGOING SIGNAL	GENERATED ON UNIT	USED ON UNIT	DESCRIPTION
AØ ... A7		A4		Address bits from system address bus
	AØAB	A6	A4	Address bit AØ in X=A/Y=B mode
ACQBØ ... ACQB7		A7		Acquisition output bits Ø ... 8
$\overline{\text{AVSB}}$		A13		Logic 0 in X=A/Y=B mode
DØ ... D7	DØ ... D7	A4-A6		Data bits from system data-bus
$\overline{\text{DAT}}$		A4		Data selection
FASDI		A13		Phase on display level
INV		A4		Signal invert
$\overline{\text{IO4}}$		A4		Data RAM select
	$\overline{\text{OERØ}}$	A6	A20	Output enable RAMØ
	$\overline{\text{OER1}}$	A6	A20	Output enable RAM1
	$\overline{\text{OER2}}$	A6	A20	Output enable RAM2
	$\overline{\text{OER3}}$	A6		Output enable RAM3
PON		A4		Power on
$\overline{\text{RD}}$		A4		Signal READ from microprocessor
$\overline{\text{SOD}}$		A4		Microprocessor serial output data
$\overline{\text{WR}}$		A4		Signal WRITE from microprocessor
	X DAC	A6	A20	Horizontal DAC output signal
	Y DAC	A6	A20	Vertical DAC output signal
	ZOVL	A6	A4	Z overflow signal
+5 V		A15		
		A15		
+5 BATT		A15		
+12 V		A15		
−12 V		A15		

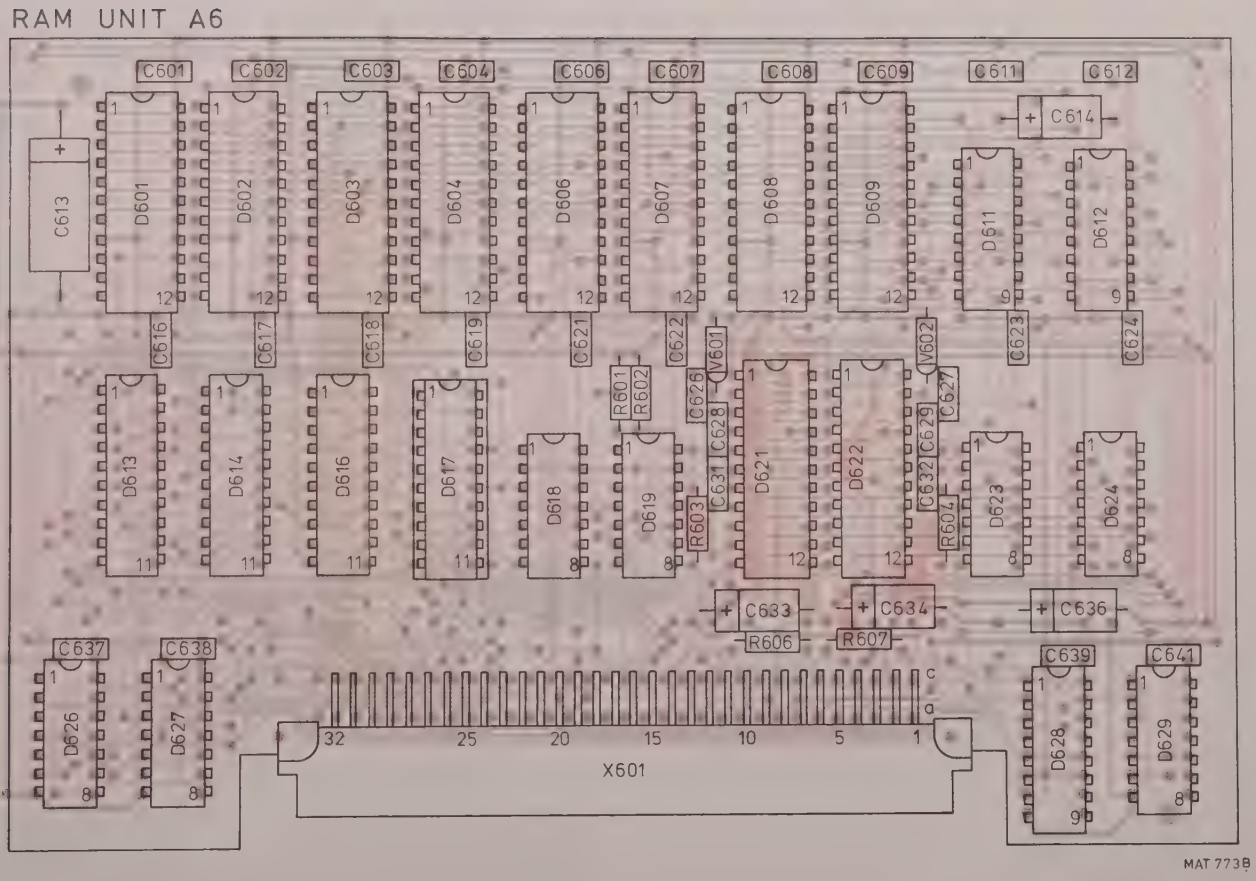
RAM UNIT A6
C601
C602
C603
C604
C606
C607
C608
C609
C611
C612
C613
C614
D601
D602
D603
D604
D606
D607
D608
D609
D611
D612
C616
C617
C618
C619
C621
C622
C623
C624
V601
V602
R601
R602
C626
C627
C628
C629
C631
C632
R603
R604
D613
D614
D616
D617
D618
D619
D621
D622
D623
D624
C633
C634
C636
R606
R607
C637
C638
C639
C641
D626
D627
D628
D629
32
25
20
15
10
5
1
X601
MAT 773B

Fig. 6.2.18.

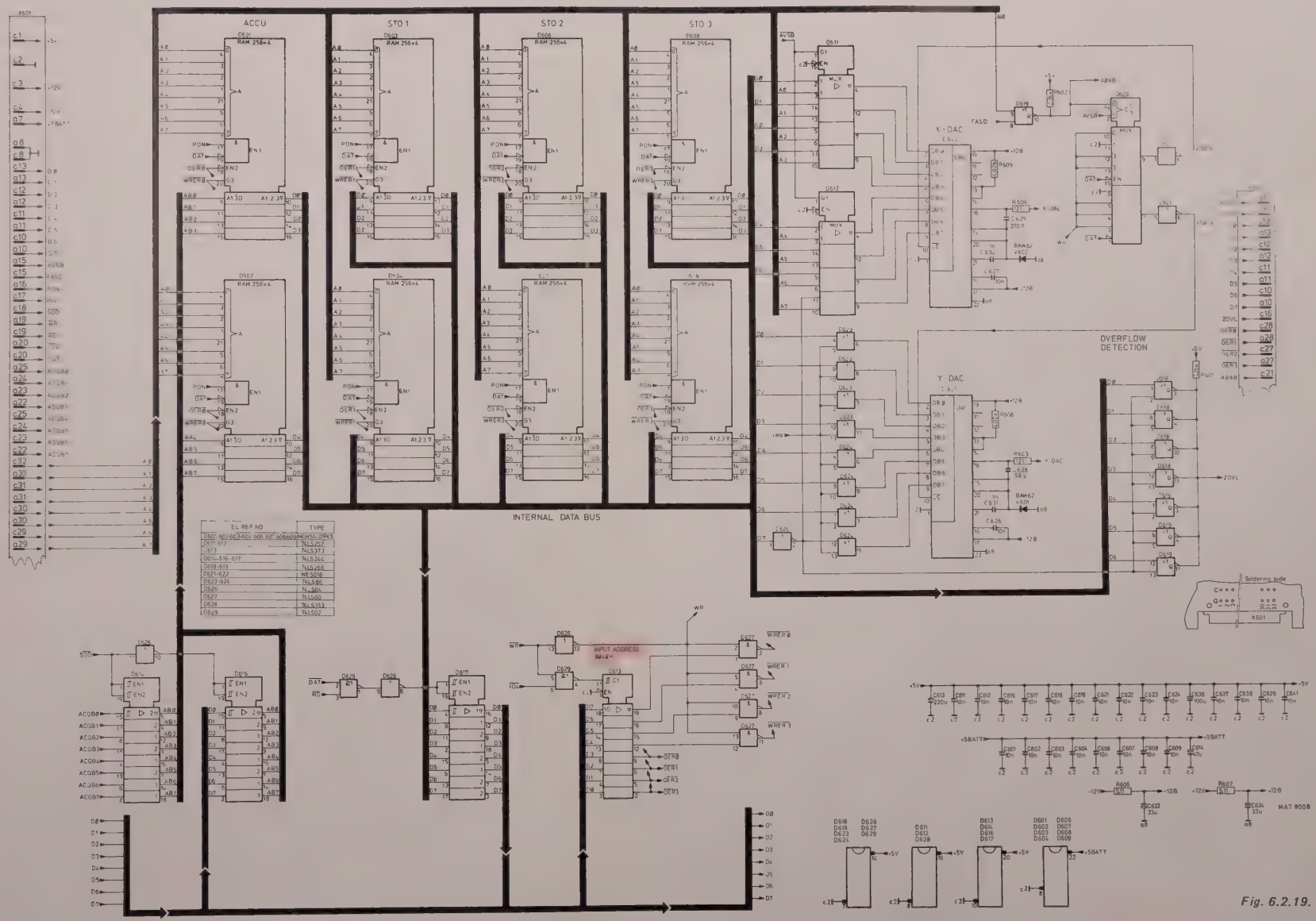

EL REF NO	TYPE
D601-602-603-604-606-607-608-609	MCM51L01P45
D611-612	74LS257
D613	74LS373
D614-616-617	74LS244
D618-619	74LS266
D621-622	NE5018
D623-624	74LS86
D626	74LS04
D627	74LS00
D628	74LS153
D629	74LS02

Fig. 6.2.19.

6.2.7. Buffer unit A7

6.2.7.1. General

The buffer unit consists of a 9-bit x 256 digital shift register for data storage and a digital-to-analog converter DAC M-1, which re-converts the digital output signals from the ADC for the correction of subsequent analog signals.

Analog information from the acquisition section of the oscilloscope is converted into a 9-bit digital value ADCBØ ... ADCB8 on the conversion unit. After conversion and final correction, these signal bits are shifted into the 9-bit x 256 digital shift register D701 ... D711 on this buffer unit, for storage.
The contents of this shift register are only shifted under the control of a clock signal CLKSH, generated in D718, D719.

$$CLKSH = \overline{\overline{(INS.NDR)} + (SOD.WR)}$$

Shifting can be interrupted therefore by blocking signal CLKSH.

The nine shift register output signals will only be applied to the ACQB bus in the P²CCD-mode (signal P = logic 1) for correction purposes or if signal NDR = logic 1 (new data is available).
Data is applied to the ACQB bus via the 3-state non-inverting buffers D716 and D717.

6.2.7.2. Data routeing and correction in P²CCD mode

For details of this, refer to the Conversion Unit A8 description.

6.2.7.3. Data routeing and correction in DRS-mode

In the DRS-mode (Direct, Roll and Sample), inaccuracies of the Track/Hold circuit and the ADC circuit are corrected before the information is stored in the shift register.
The circuit is operative for dual-channel mode working, i.e. with both channel A and channel B switched on. This mode is arranged to function automatically even if only one channel is selected.

Principle of operation

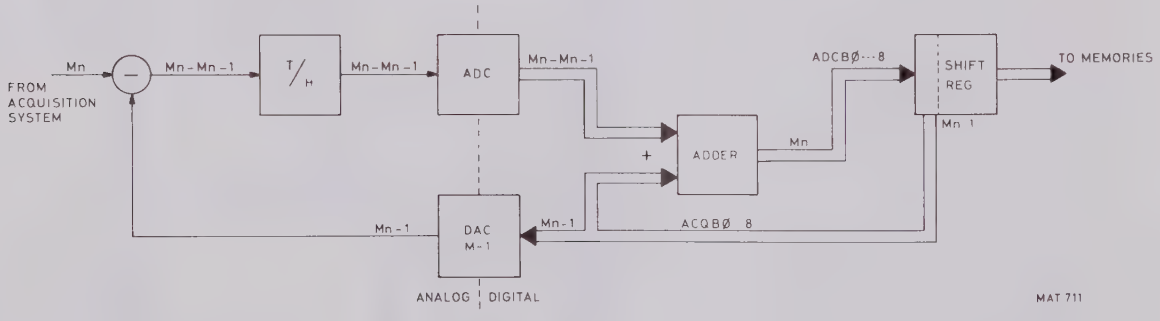

Fig. 6.2.20

To reduce errors in conversion, analog samples for digitising are compared with preceding samples, these being subtracted so that only small increments are converted to digital values in the ADC. After conversion, the digital equivalent of the original analog signal is produced by adding the differential signal from the ADC to the digital value of the preceding sample.

Referring to the block diagram, M_n is the new sample of the input signal from the acquisition system; M_{n-1} is the preceding sample, derived from the shift register and re-converted by DAC M-1 to analog form. At the input to the Track and Hold circuit, M_{n-1} is subtracted from M_n to produce a differential analog voltage, which is then converted to digital form in the ADC and added to the preceding digital value M_{n-1}.

$$\text{i.e. } (M_n - M_{n-1}) + M_{n-1} = M_n$$

After this procedure, the adder output value M_n will be shifted into a shift register as a new and corrected value. This system of digital adding is also used, in a different way, in the P²CCD-mode as described in the Conversion Unit A8.

Detailed description

This digital adding technique is now described in greater detail with reference to the various circuit elements. The analog value of the preceding signal sample M_{n-1} is subtracted from the new sample M_n in the vertical amplifier stage. This results in a differential analog voltage $M_n - M_{n-1}$, which is converted to digital signals ADCBØ ... ADCB8 and applied to the adder circuit on unit A8 together with the preceding sample M_{n-1} in digital form.

After adding overflow detection and marking, the sum signal M_n is applied as ADCBØ ... ADCB8 to the shift register on the buffer unit A7. With this new signal value stored in the shift register, the circuit continues with the next.

The corrected sample value M_n on the ADCB lines from the conversion unit A8 to the shift register is also applied to the 4-bit latches D712 and stored under the control of signal CØ. The output signals from the latches are applied to the digital-to-analog converter DAC (M-1) D714.

In the P-mode, the DAC (M-1) circuit is switched off by the P signal on the $\overline{LE}$ input pin 10.
However, in the DRS-mode the DAC (M-1) circuit is switched on.
The most-significant bit of the 8-bit 2's complement information offered to the DAC (M-1) is inverted by D719 (4,5) to translate the data into 8-bit straight binary notation.
Conversion by DAC (M-1) results in the analog value of the preceding digital sample M_{n-1} and this value is fed back to the vertical amplifier stage for subtraction from the new signal sample M_n.

In the amplifier stage, analog subtraction will result in a new differential voltage as previously described. This differential voltage $M_n - M_{n-1}$ is then converted to digital in the ADC and added to the old digital value M_{n-1}.
The old digital value that was stored in the two 4-bit latches D712 is in the meantime shifted to the next two 4-bit latches D713 by control signal C4 and fed to the adder circuit. Here, the 8-bit 2's complement notation is converted into a 9-bit ACQBØ ... ACQB8 digital form by copying the last bit.
Data from one signal source only may be fed to the ACQB bus by more than one buffer simultaneously. This is made possible by signals P and NDR via NOR-gate D718 (4,5,6) and inverter D719 (2,3).
Each time an NDR pulse is generated, the total shift register contents will be copied into the ACCU memory.
Precise timing diagrams are given in the ACL Unit A9 description.

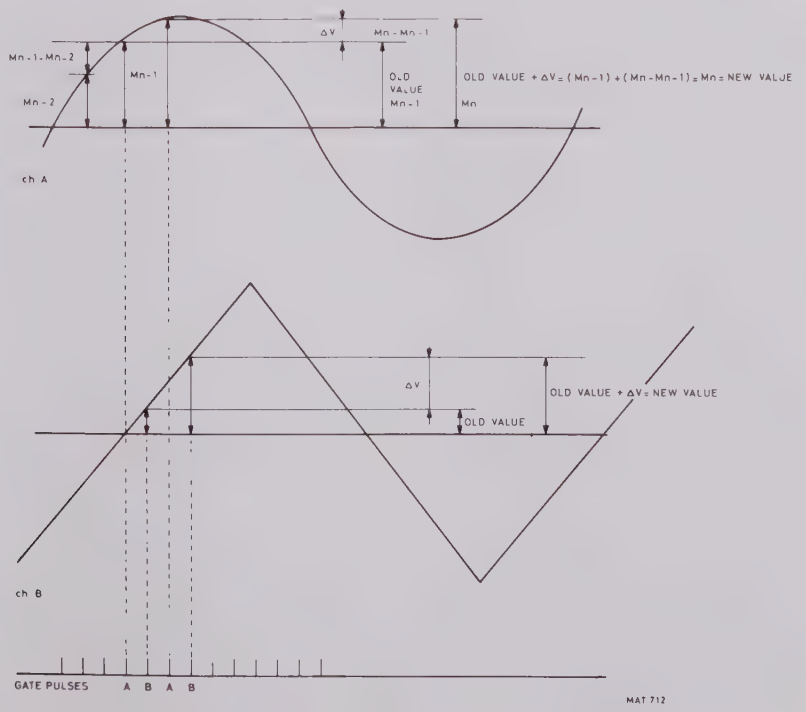

Fig. 6.2.21.

INCOMING SIGNALS	OUTGOING SIGNALS	GENERATED ON UNIT	USED ON UNIT	DESCRIPTION
	ACQBØ ... 8	A7	A6–8	Acquisition output bits Ø ... 8
ADCBØ ... 8		A8		ADC bits
CØ		A9		Control Ø signal from ACL unit
C4		A9		Control 4 signal from ACL unit
	CLKSH	A7		Clock pulse for shift register
	DAC M-1	A7	A21	DAC M-1 output signal
INS		A9		Shift command for shift register
NDR		A9	A4	New data ready
P		A12	A7–8–9–10	P-mode signal
$\overline{\text{SOD}}$		A4		Microprocessor serial output data
	SOD	A7	A8	Microprocessor serial output data
$\overline{\text{WR}}$		A4		Signal write from microprocessor
+5 V		A15		
+12 V		A15		
–12 V		A15		
		A15		

BUFFER UNIT A7

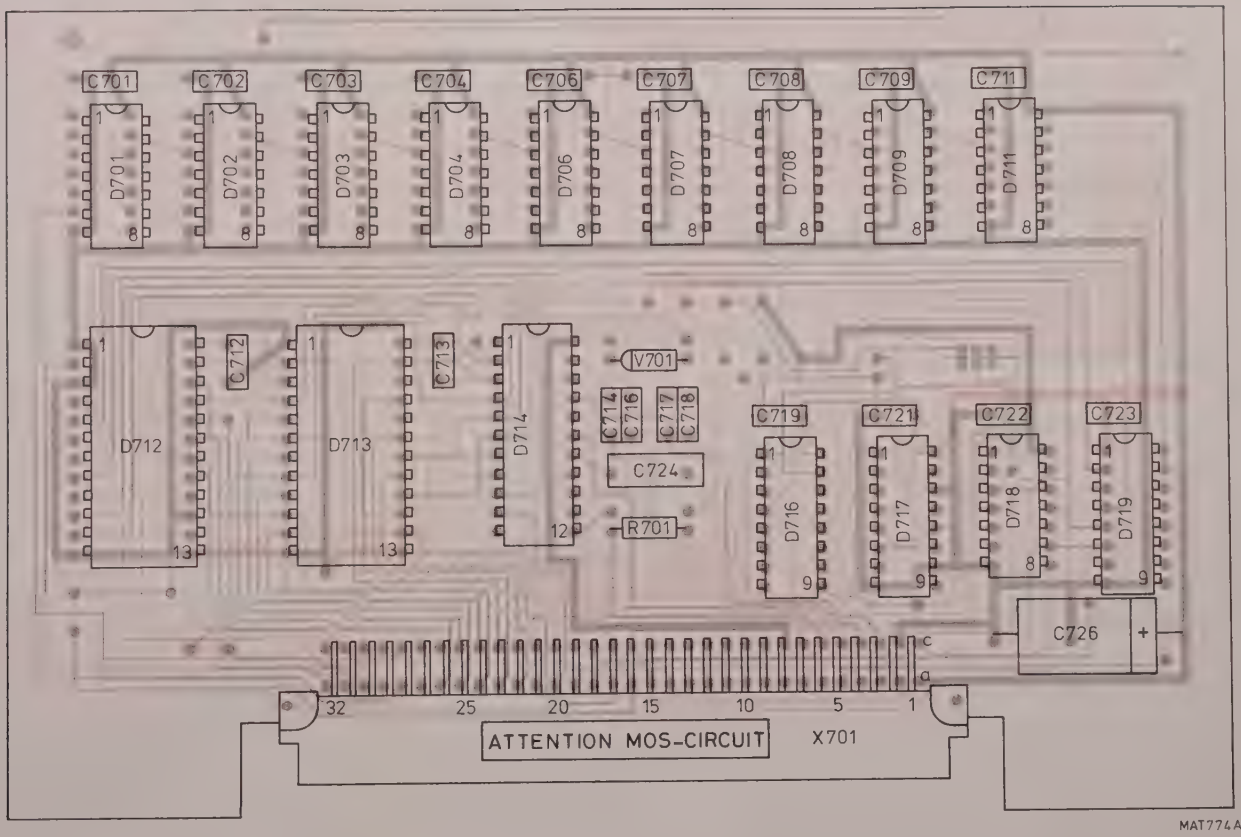

Fig. 6.2.22.

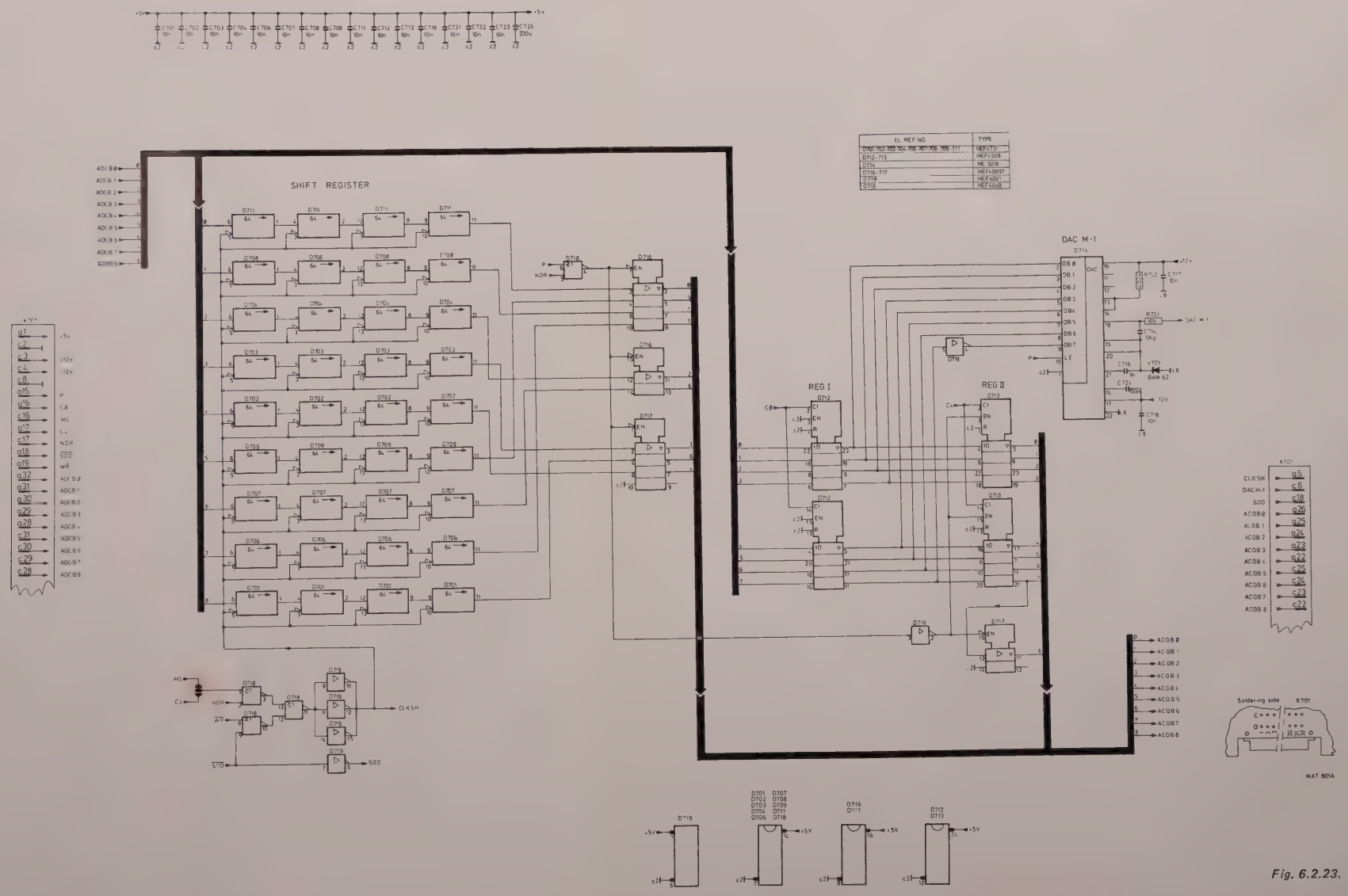
SHIFT REGISTER
REG I
REG II
DAC M-1
EL REF NO
TYPE
D701-702-703-704-705-706-707-708-709-711
HEF4731
D712-713
HEF4508
D714
NE 5018
D715-717
HEF40097
D718
HEF4001
D719
HEF4049
Soldering side
X701
MAT 801A

Fig. 6.2.23.

6.2.8. Conversion unit A8

The conversion unit basically consists of an ADC for converting the input signals into digital form for storing in the shift register on the buffer unit A7, a circuit for signal zero correction, and an overflow detection and marking circuit.

These functions are performed by the following circuit blocks:

- a sample and hold circuit for analog inputs, D822
- analog-to-digital converter (ADC) D821
- AND-gates D801, D813 for controlling inputs to the adder circuit
- exclusive-OR gates D802, D814, D809 for inverting signal to adder for subtraction during correction
- adder circuit D803, D816, D804
- multiplexers D806, D807, D817, D818 on adder outputs for overflow detection, marking, etc.
- result registers D819, D811 for storing multiplexer output signals.

6.2.8.1. Sample and Hold circuit

Analog output signal VOUT from the CCD logic unit (A10), which represents the A and/or B channel input signals in one of the selected modes, is applied to input 3 of the sample and hold circuit D822. This circuit is controlled by the TRACK signal:

TRACK = logic 1 — the circuit only tracks the input signal

TRACK = logic 0 — (= HOLD) the circuit holds the input level that was present at the negative-going edge of the TRACK signal

The output signal of this sample and hold circuit D822 provides an input to the ADC that lies between +5 V and –5 V.

6.2.8.2. Analog-to-digital converter (ADC)

The analog input level from the sample and hold circuit is converted into a digital 9-bit number in the ADC circuit D823.
Conversion is controlled by the clock pulses CLADC. (Nine clock pulses are used to convert to this 9-bit number). As the ADC is a 10-bit type, the least-significant bit being ignored. These clock pulses are only generated by the ACL unit A9 during the period when the CONV signal (conversion) is at logic 1.

The ADC output signal CONV reverts to logic 0 at the end of the conversion period, thus indicating that conversion is complete and that the results can be fed to the ADCBØ ... ADCB8 bus via the tri-state non-inverting buffers D811, D812.

The 9-bit digital output of the ADC is straight binary coded and is converted to 2's complement notation in exclusive-OR gate D809 (11,12,13) by inverting the most-significant (9th) bit, as shown in the following table.

	STRAIGHT BINARY (9-bit)			2's COMPLEMENT (9-bit)		
	Decimal			Decimal		
–5 V	+0	0	0 0 0 0 0 0 0 0	–256	1	0 0 0 0 0 0 0 0
		0	0 0 0 0 0 0 0 1	–255	1	0 0 0 0 0 0 0 1
		0	1 0 0 0 0 0 0 0	–128	1	1 0 0 0 0 0 0 0
		0	1 1 1 1 1 1 1 1	–1	1	1 1 1 1 1 1 1 1
		1	0 0 0 0 0 0 0 0	+0	0	0 0 0 0 0 0 0 0
		1	0 1 1 1 1 1 1 1	+127	0	0 1 1 1 1 1 1 1
+5 V	+511	1	1 1 1 1 1 1 1 1	+255	0	1 1 1 1 1 1 1 1

INVERSION OF THE 9th BIT

The 2's complement equivalent value is fed to the ADCB bus-lines by the tri-state non-inverting buffers D811, D812 under the control of signal C1. With C1 at logic 1, the buffers are in 3-state mode.

Signal input C1 is a control line which, together with signal C2 prevents simultaneous input of data to the bus-lines by more than one buffer.

6.2.8.3. Correction circuits

As the correction circuits operate in conjunction with other circuits that are not part of the conversion unit A8, the data routeing and the principles of correction in the P^2CCD-mode are first discussed.

Data routeing and correction in the P^2CCD-mode

Due to internal P^2CCD faults and differences between the frequencies f_{in} and f_{out}, an incorrect zero level of the P^2CCD output signal is possible as shown in the following graph.

Fig. 6.2.24.

P^2 CCD output signal with shifting zero level

Under these conditions, the total faulty contents of the P^2CCD are converted from analog form to digital in 256 steps and after each conversion the data is put on the ADCBØ ... ADCB8 bus and directly shifted into the 9-bit shift register on buffer unit A7. After 256 steps, the total P^2CCD contents are stored here, and the register is then blocked.

In order to correct the zero level, the P^2CCD input is switched to zero and 256 samples of this zero signal are shifted into the P^2CCD at the same frequency f_{in} as for the normal input signal.

By reading the P^2CCD contents again, with the same frequency f_{out} (78 kHz) as for the faulty input signal, an incorrect zero level having the same errors as described above will appear on the P^2CCD output as shown below.

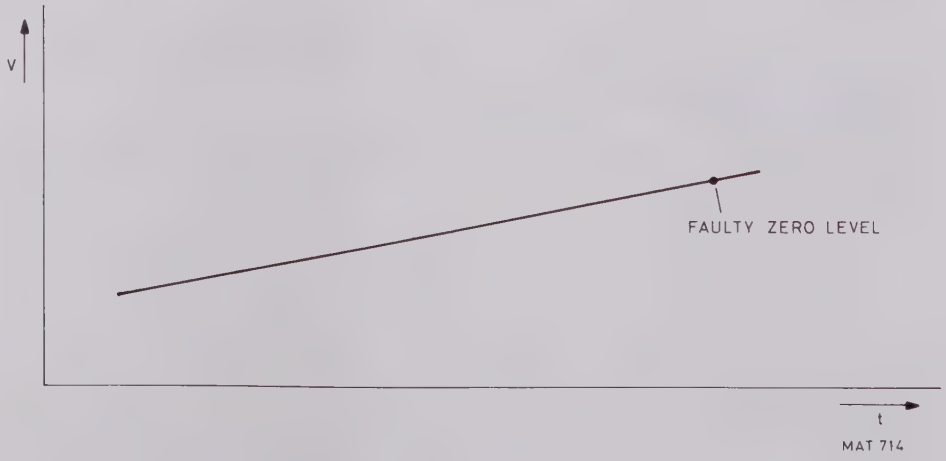

Fig. 6.2.25.

This incorrect zero level is then digitally subtracted (in 256 steps) from the faulty input signal, which was already stored in the shift register.
The corrected result is then re-stored in the shift register.

Correction circuit description

Considering the correction circuits in more detail, the correction cycle is started when the P2CCD is completely filled with zero samples. This is done in 256 steps, in which for every step, one sample of faulty input information from the shift register, and one converted zero sample from the P2CCD are applied to an adder circuit on this conversion unit (A8), consisting of the integrated circuits D803, D816 and D804.

The procedure is as follows:

- The shift register contents are placed byte after byte on the ACQBØ ... 8 bus via a buffer and directly applied to the inputs of the adder circuits.
- The samples of zero information from the P2CCD are placed on the ADCBØ ... 8 bus, sample after sample in the same way as described for the uncorrected signal information. However, in this case it is not shifted into the shift register but is transferred via AND-gates D801, D813 and exclusive-OR gates D802, D814 and D809 (4,5,6) to the adder circuit. For correct overflow detection and marking, bit 9 is copied and applied to the adder as bit 10.

  (During the copying of the shift register contents into the ACCU memory in ROLL-mode, one side of the adder input is blocked via AND-gates D801, D813 by the $\overline{\text{NDR}}$ signal to permit recirculation of the shift-register contents.)

  The exclusive-OR circuits serve to invert the zero information so that it can be subtracted from the signal information. The subtraction process is performed by inverting the zero information and adding it, together with a forced carry, to the signal information from the shift register.
  The forced carry is obtained by signal P on input 9 of adder circuit D803.

At the output of the adder, the corrected signal samples appear one by one and are transferred to the overflow detecting and marking circuits (multiplexers D806, D807, D817, D818).
The ACCU memory, and thus the c.r.t. display, is 8-bit wide; therefore the corrected adder output signals, which can be 10-bit wide, are checked for overflow. Consequently, if overflow occurs, this condition will be indicated and overflow marking is necessary.

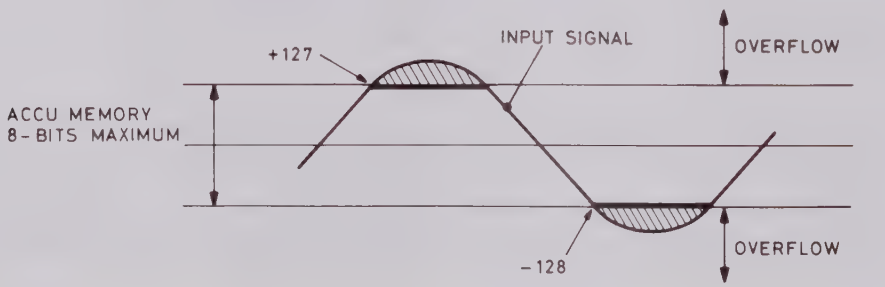

Fig. 6.2.26.

Marking is carried out by changing the signal value during overflow in one of the digital values +127 or −128, via the multiplexers D806, D807, D817, D818.

These multiplexers are controlled by the adder output bits ADOB7, ADOB8, ADOB9, which give information about overflow.

ADOB9	ADOB8	ADOB7	MULTIPLEXER OUTPUT
0	0	0	ADDER OUTPUT
0	0	1	+127
0	1	0	+127
0	1	1	NON-EXISTING
1	0	0	COMBINATIONS
1	0	1	−128
1	1	0	−128
1	1	1	ADDER OUTPUT

In case of an overflow, signal ADOB9 indicates whether it is an overflow or an underflow. ADOB8 and ADOB7 together indicate whether there is an overflow condition.
After marking, the multiplexer output signals are stored in the result register D819 under the control of C3.
These output signals are applied to the bus ADCBØ ... 8 via D819 and D811 when signal C2 is logic 0.
C2 = 1 indicates that the buffer outputs are in tri-state.
At the same time, the last bit is copied to re-establish a correct 9-bit 2's complement notation.

The data placed on the bus in this way are the corrected samples and are shifted again into the shift register. After 256 correction steps the shift register contains the complete corrected signal.

Signal NDR (new data ready) now reverts to logic 1 and the shift register contents are copied into the ACCU memory under the control of the microprocessor and its software.

The contents of the shift register are copied into the ACCU memory including the overflow markings +127 or −128. The overflow markings are detected by hardware when the contents of the ACCU are required to be displayed on the c.r.t. screen. This results then in a flashing trace on the c.r.t. screen to indicate this overflow. The same is possible if the ACCU-memory contents are saved in one of the memories STO1 - STO2 or STO3.

Signal $\overline{CLR}$ enables zeros to be placed on the bus to reset the shift register contents in case of ACCU-memory clearing.

Data routeing and correction in DRS mode

Refer to description of buffer unit A7.

Note: For timing diagrams and explanation of timing refer to the description of the ACL unit A9.

INCOMING SIGNAL	OUTGOING SIGNAL	GENERATED ON UNIT	USED ON UNIT	DESCRIPTION
ACQBØ ... ACQB8		A7		Acquisition output bits Ø ... 8
	ADCBØ ... 8	A8	A7	ADC output signals bit Ø ... bit 8
C1		A9		Control 1 signal from ACL unit
C2		A9		Control 2 signal from ACL unit
C3		A9		Control 3 signal from ACL unit
CLADC		A9		Clock signal for ADC
$\overline{CLR}$		A4		Clear signal for shift register
	CONV	A8	A9	Conversion
$\overline{NDR}$		A9		New data ready
P		A12		P^2CCD-mode
SOD		A7		Microprocessor serial output data
TRACK		A9		Track command from ACL unit
VOUT		A10		CCD logic unit analog output signal
$\overline{WR}$		A4		Signal WRITE from microprocessor

CONVERSION UNIT A8

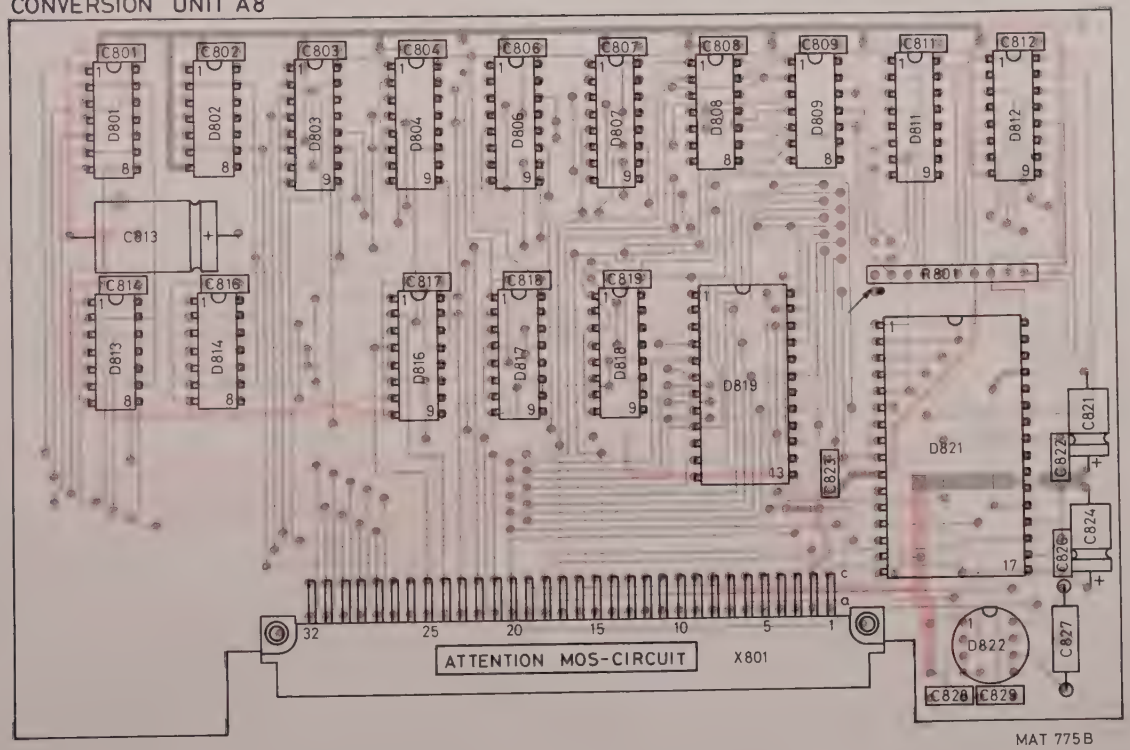

Fig. 6.2.27.

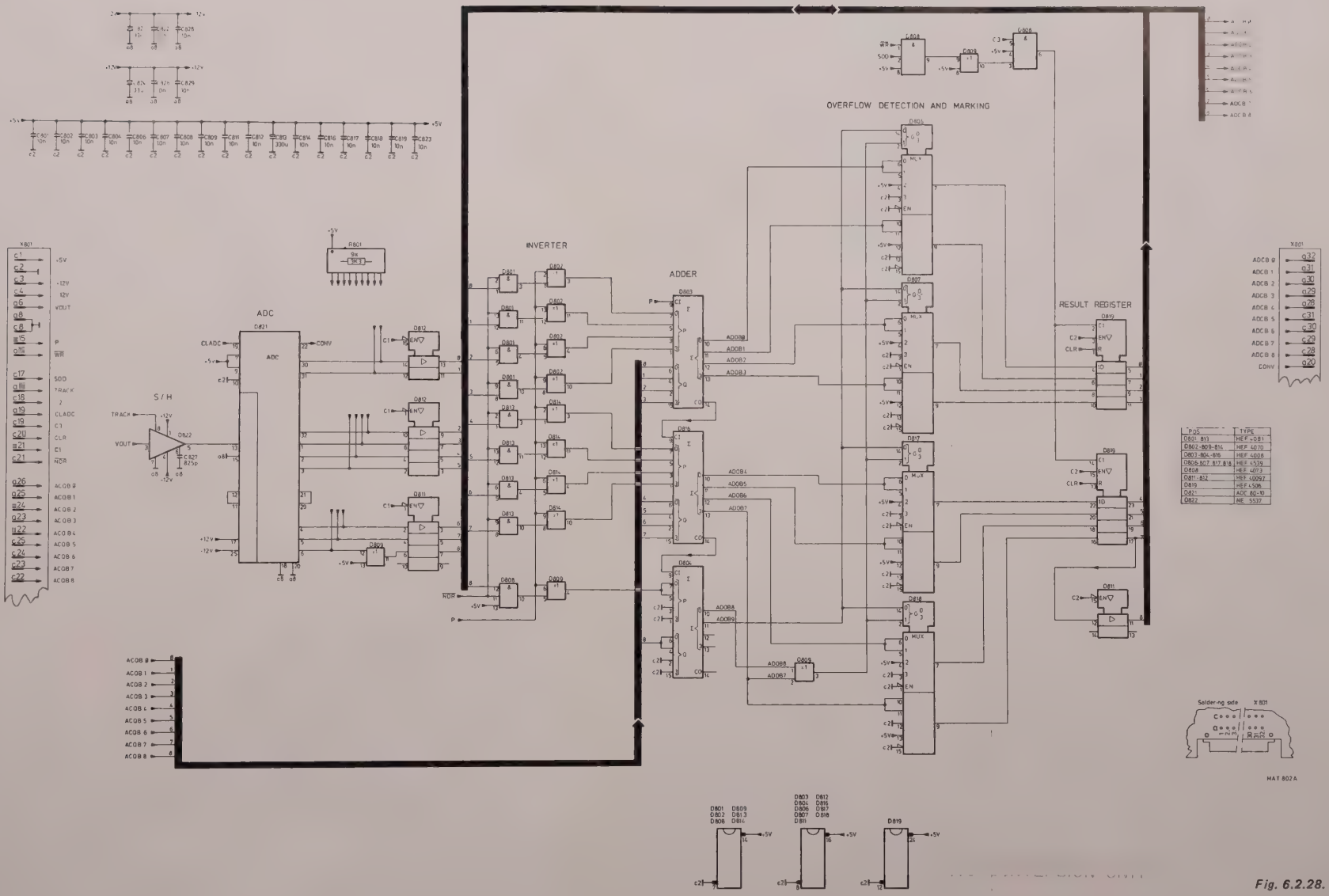

POS	TYPE
D801-813	HEF 4081
D802-809-814	HEF 4070
D803-804-816	HEF 4008
D806-807-817-818	HEF 4539
D808	HEF 4073
D811-812	HEF 40097
D819	HEF 4506
D821	ADC 80-10
D822	NE 5537

Fig. 6.2.28.

6.2.9. Acquisition control logic unit A9

6.2.9.1. General

Before discussing the timing functions in the various operating modes, the general circuit functions of the Acquisition Control Logic unit are first outlined. The ACL unit contains the timing circuits that generate the signals required to control the conversion unit (A8) and the buffer unit (A7).

A Hold and Convert pulse HOCON starts each analog-to-digital conversion of an input signal sample. In the P-mode, this is signal HOCON P from the CCD logic unit A10; in the Direct, Roll and Sampling modes, this is HOCON DRS from the trigger unit A22.
Depending on the mode selected, one of these hold and convert signal lines is applied to the clock input of D-type flip-flop D909 via multiplexer D911, pin 7. This multiplexer is controlled by the signals P and R, to give the following:

SIGNALS R	SIGNALS P	D911 output pin 7
0	0	HOCON DRS
0	1	HOCON P
1	0	HOCON DRS
1	1	(unavailable input signal combination)

Flip-flop D909 is switched by the HOCON pulse, resulting in the TRACK signal going to logic 0, which brings the Track and Hold circuit on the conversion unit to the HOLD state.
Analog-to-digital conversion is now started and controlled by the nine clock pulses CLADC (pin 11 of NAND-gate D906), which are derived from a 1,25 MHz clock signal. During conversion in the ADC, a signal CONV is at logic 1. After conversion, this signal goes to logic 0, indicating that conversion is finished. Output pin 6 of flip-flop D909 is now switched to 0 by the $\overline{\text{CONV}}$ signal and this zero resets the other two flip-flops in the circuit (RESET inputs D908-12, D909-13). In this way, the CONV signal blocks the CLADC pulses again and switches the TRACK signal. The track and hold circuit now returns to tracking the input signal.

The CHOP output of chopper flip-flop D908 is switched to its opposite state at the end of each conversion by signal $\overline{\text{CONV}}$ on its clock input. Only in the P-mode, where the CHOP signal is not required, is the chopper flip-flop set permanently to its '1'-state, i.e. signal CHOP is logic 1. This is achieved by a zero level on the direct set input of the flip-flop.

During each conversion, a CØ pulse on D906-8 is fed from the CONV signal to control the first buffer stage (D712 on unit A7) after the adder circuit (on unit A8). This is the buffer stage that sends its data to the digital-to-analog converter DAC (M-1).

At the completion of each ADC conversion, counter D928, which has been preset to the value 15, starts counting the 1,25 MHz pulses on its clock input.
The start of counting is initiated by the output signal of flip-flop D927, which is set to logic 1 by the positive-going edge of the $\overline{\text{CONV}}$ signal.

	OD	OC	OB	OA
15 →	1	1	1	1
0	0	0	0	0
1	0	0	0	1
2	0	0	1	0
3	0	0	1	1
4	0	1	0	0
5	0	1	0	1
6	0	1	1	0
7	0	1	1	1
15	1	1	1	1

The first counting pulse results in counter-state 0. Output signals OA, OB, OC and OD are applied to a BCD/1 : 10 decoder, D923.
Control pulses C3 and C4 are derived directly from decoder outputs 3 and 4 respectively. The C3 pulses are only present whenever there is no new data ready, i.e. if $\overline{NDR}$ = logic 1.
After state 7 of the counter, a logic 0 on output pin 9 of the decoder is fed back to the direct reset input of flip-flop D927 to switch it to its zero state. Thus the count pulses for the counter are blocked and it is again preset by the value 15. From the same decoder output signal a COUNT pulse is given via flip-flop D913, which is switched as a normal inverter. One COUNT signal is generated for each ADC conversion and so provides a means of counting the number of conversions.

Control pulses C1, C2 (C1 inverted) and INSP are generated by multiplexer D921 controlled by the NDR and PN signals.

CONTROL SIGNALS		OUTPUT SIGNALS	
NDR	PN	C1	INSP
0	0	OC	INSR
0	1	0 V	$\overline{C3}$
1	0	+5 V	+5 V
1	1	+5 V	+5 V

Signals C1 and INSP are permanently at logic 1 during NDR. Therefore, during copying the contents of the shift register into the ACCU memory, the buffer following the ADC circuit will be set in its tri-state, i.e. no ADC output data can be sent either to the adder or to the shift register circuit.

Signal C1 will be at logic 1 when uncorrected signal information has to be shifted into the shift register in the P-mode (PN at logic 1). This allows the information to be shifted directly into the register. The shift command INSP is in this situation derived from signal $\overline{C3}$. In the DRS modes and during zero correction in the P-mode, C1 and also C2 signals are derived from counter output OC. These signals control the ADC output buffer and the adder output result register (D819 on unit A8) so that only one of the two can output data on to the ADCBØ ... 8 bus at any given time.
In the DRS modes, and during zero correction in the P-mode, the INSP signal is derived from decoder output signal INSR. Therefore, INSP is generated after the correction result is put in the result register and the register output data is fed to the ADCBØ ... 8 bus.

6.2.9.2. Timing in P-mode

Flip-flop D913 is set to logic 1 by a trigger pulse DELTRG in normal trigger mode and by $\overline{AUTRI}$ in the AUTO mode, both signals being generated by the delayed trigger unit (A13).
After receiving a trigger signal, the NULIN signal goes to logic 1. This signal is applied to the vertical amplifier unit A21 to block the amplifier channels so that a zero level is offered to the P^2CCD inputs.
A signal $\overline{FOE}$ (frequency output enable) also goes to logic 0 (assuming that pin 10 of D914 is at logic 1) to indicate to the CCD logic unit that the P^2CCD contents can be read with a clock signal of 78 kHz approx. This will result in HOCON P pulses to start ADC conversions.

The COUNT signals generated at each conversion are counted by the 10-bit acquisition control logic counter consisting of two flip-flops D924 and two 4-bit counters D918 and D917.
This counter, which was in its reset state in the preceding P-mode cycle, is now enabled for counting. Signal NUL IN switches, via multiplexer D916, the flip-flop D902 so that the counter is no longer held in its reset state and is ready to receive count pulses. Signal $\overline{FOE}$ sets the multiplexer D926 so that the COUNT pulses on input 12 appear at output 9. These COUNT pulses are applied to the counter and after 256 have been counted the entire P^2CCD contents are read, digitised and shifted into the shift register. Counter state 256 is indicated by a logic 1 on pin 12 of D917. This signal switches $\overline{FOE}$ to logic 1 via inverter D919 and NAND-gate D914 to stop the P^2CCD read cycle.

A cycle now starts in which the P²CCD is completely filled with zero information, using the same frequency for shifting as that for reading in the input signal information.
Signal $\overline{FOE}$ now switches multiplexer D926 to the state where the 50 kHz signal on pin 13 is coupled to the input of the counter. Counting continues up to 512 and in the meantime, zero information is shifted for about 5 msec into the P²CCD via the NUL IN signal in the vertical amplifier unit (256 x 0,02 msec is approximately 5 msec).
When the counter reaches 512, output 12 of D917 returns to logic 0 and also signal $\overline{FOE}$ = logic 0.
Now a cycle starts in which the zero contents of the P²CCD are read and digitised in 256 steps at a clock frequency of approximately 78 kHz. At every step, one sample of uncorrected information in the shift register is corrected by a zero sample from the P²CCD and the result shifted again into the register. After 256 corrections the total corrected signal is present in the shift register.
At the end of the correction cycle, the state 768 (512+256) of the counter is detected by NAND-gate D914 (11,12,13), which results in a logic 0 on output pin 11.

This signal is fed to output pin 9 of multiplexer D916 and causes flip-flop D902 to switch to its zero state. The output signal on pin 9 of D902 prepares the reset of two synchronous counters with synchronous clear, D918, D917. These can now be reset by a pulse on the clock input, which is derived from a 1,25 MHz clock signal via D926 and D924. The clock signal can pass through multiplexer D926 because of the low level of the output signal on pin 9 of D916, which is applied to input 2 of D926.

After the reset of counters D918 and D917, the output pin 3 of NAND-gate D914 goes to logic 0 via the multiplexer and NAND-gate D914 (11,12,13). This signal resets the two flip-flops D924 of the acquisition control logic counter. The entire counter is now in the reset state and remains in this state until the next NUL IN signal is generated.

At the end of the correction cycle, the positive-going edge of the signal on output 8 of flip-flop D902 will, via multiplexer D901, switch NDR flip-flop D902 to its logic 1 state. Signal NDR is applied to the SID input of the microprocessor on unit A4 to indicate that new data is ready and can be copied by the ACCU memory.

After a certain time, the microprocessor reacts by generating a logic 1 on its SOD output and 256 $\overline{WR}$ pulses followed by a logic 0 on its SOD input. During the SOD signal the shift register contents are copied into the ACCU memory in 256 steps controlled by the $\overline{WR}$ pulses from the microprocessor.

Trigger flip-flop D913 is then brought to its reset state by signal $\overline{CTF}$, which is derived from signal $\overline{NDR}$ via multiplexer D901.
The whole system can react again on incoming trigger pulses at the end of the 'handshake' cycle.

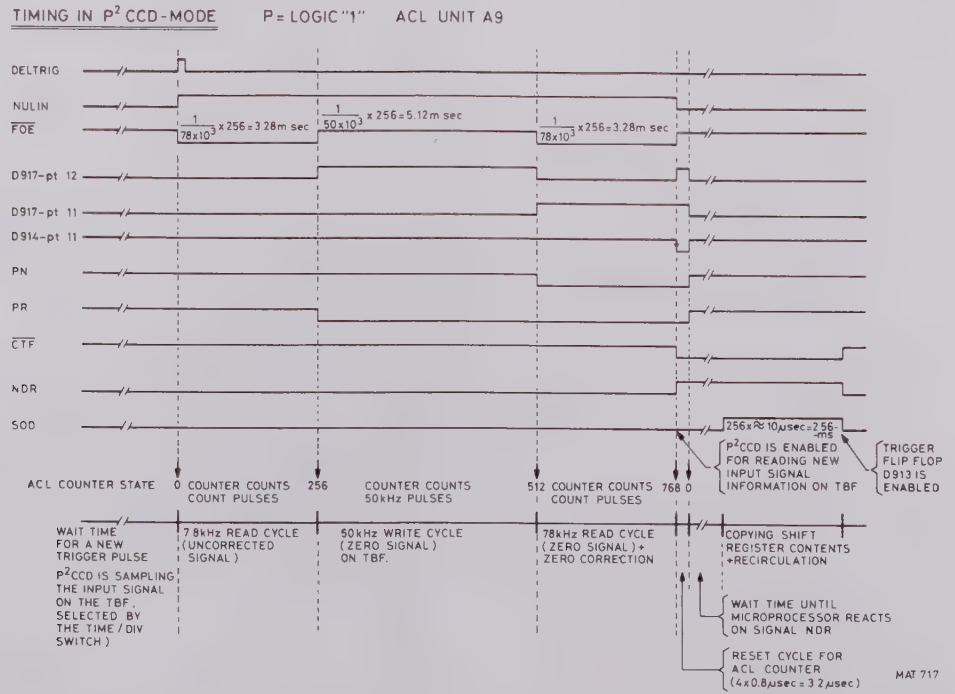

Fig. 6.2.29

Flip-flop NDR is then reset by the positive-going edge of the $\overline{SOD}$ signal via the flip-flop consisting of NAND-gates D903, and signal $\overline{CTF}$ goes to logic 1 so enabling trigger flip-flop D913 again.

The NDR signal will also be generated while the CLEAR button on the front panel is operated.
Signal $\overline{CLR}$ is then at logic 0.

6.2.9.3. Timing in Direct mode

In the Direct mode the flip-flop D913 is switched to logic 1 by a trigger pulse DELTRG in normal trigger mode and by $\overline{AUTRI}$ in the AUTO mode, both signals being generated by the delayed trigger unit (A13).

On receipt of a trigger, flip-flop D913 is switched and applies a logic 1 to the D-input of NDR flip-flop D902 via NAND-gate D903 (1,2,3).
The NDR flip-flop switches to logic 1 at the first COUNT pulse on its clock input (received via multiplexer D901). This commences an NDR cycle to copy the shift register contents into the ACCU memory in the way already described for the P-mode.

The NDR flip-flop is reset by the positive-going edge of the $\overline{SOD}$ signal via the flip-flop comprising NAND circuits D903. Simultaneously, the acquisition control logic counter starts counting 256 COUNT pulses. This start is initiated by the $\overline{NDR}$ signal on the clock input of flip-flop D902, received via multiplexer D916.
At this same start time, a logic 0 on output 8 of flip-flop D902 causes output $\overline{CTF}$ of multiplexer D901 to go to logic 0. This results in a reset of the trigger flip-flop D913.

The acquisition control logic counter counts up to state 256. This state is decoded, resulting in a logic 1 on pin 12 of counter D917, which is applied via inverter D919 (8,9) and multiplexer D916 to flip-flop D902.

The counter is then reset in the way described for the P-mode.

At this moment, it is established that at least 256 new samples of the input signal are stored in the shift register, so the total shift register contents are refreshed (i.e. a type of trigger hold-off).

Resetting the acquisition control logic counter results in signal $\overline{CTF}$ going to logic 1, thus again enabling the trigger flip-flop D913.
This prepares the flip-flop to receive another trigger to start a new D-mode cycle.

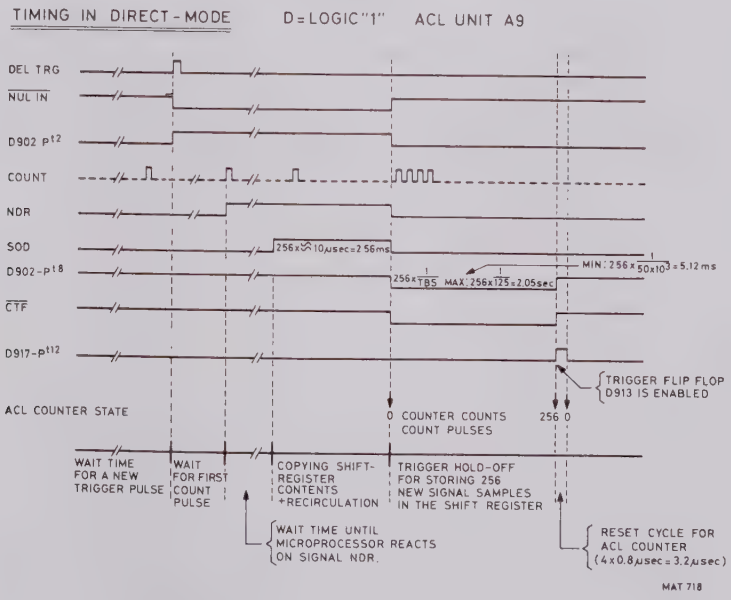

Fig. 6.2.30.

6.2.9.4. Timing in Roll mode

If ROLL-mode is selected and the RUN/STOP pushbutton is pressed once, the ROLL-mode action is started by TBS pulses generated on time-base unit A12 after a start signal from the microprocessor.
HOCON DRS pulses are derived from the TBS pulses on trigger unit A22. Each HOCON DRS pulse applied to the ACL unit A9 starts an analog-to-digital conversion of a new input signal sample.
The ACL unit is set to ROLL-mode by the R control signal.
In the ROLL-mode the D-input of the NDR flip-flop D902 is permanently at logic 1 via NAND-gate D903 (1,2,3).
Each time a new signal sample is stored in the shift register, a COUNT pulse is generated and an NDR cycle started as described for the P-mode.

During this NDR cycle, the entire shift register contents are copied by the ACCU memory and re-circulated.

The microprocessor and its software calculate the number of NDR cycles and after each 256 the ACCU memory contents are copied in one of the memories STO3, STO2, STO1 under software control.
The last 256 samples remain in the ACCU memory. The ROLL-mode is now finished, this being indicated by a flashing RUN lamp on the instrument front panel.

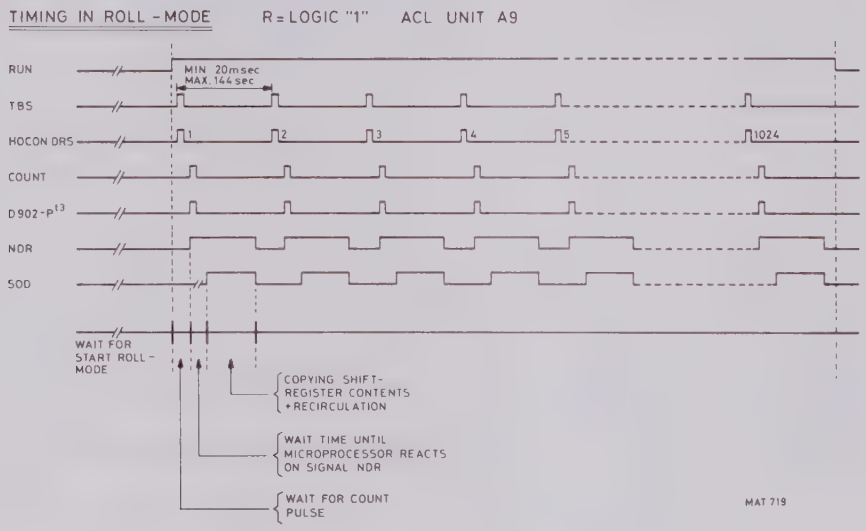

Fig. 6.2.31.

6.2.9.5. Timing in Sampling mode

The control signal S sets the ACL unit in the Sampling mode.

Correct functioning in this mode requires that signals of a repetitive nature are applied to the input channels of the instrument.

Each sampling cycle is started with the staircase counter in the zero position and a pre-determined LEVEL setting.
During one sampling cycle 256 samples of the input signal are stored in the shift register to build a complete signal picture. Each input trigger signal takes one sample of the input signal as now described.

On each trigger signal a fast ramp signal is generated (on unit A22) which is compared with the output of a DAC circuit DACSTAIR, D904. This circuit is coupled to the staircase counter to convert the counter state into the analog signal DACSTAIR.
At the crossover point determined by each comparison of the fast ramp signal and the DACSTAIR signal, an HOCON DRS pulse is generated to start the ADC conversion of the new signal sample.
The time between samples depends on the fast ramp speed which, in turn, is determined by the time-base frequency setting.

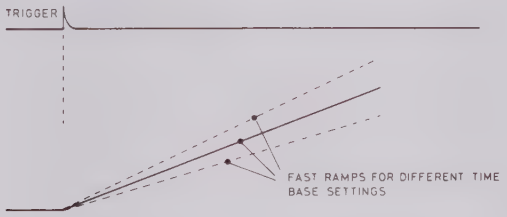

Fig. 6.2.32.

After each conversion, a COUNT pulse is counted by the staircase counter, which causes the DACSTAIR output signal to increase by one step (40 mV).
In this way, the time between the trigger pulses and the generation of the HOCON DRS signal increases so that each new sample is taken one step later.

The shift register is completely filled after 256 samples and its contents can be copied by the ACCU memory. This is initiated by state 256 of the staircase counter. A logic 1 on pin 12 of the counter D917 causes it to reset to zero as already described in the P-mode. The logic 1 level on output 8 of reset flip-flop D902 is fed to the clock input of the NDR flip-flop via multiplexer D901. This starts an NDR cycle and the shift register contents can be copied in the ACCU memory. After this, the staircase counter is again enabled for counting by the positive-going edge of the $\overline{\text{NDR}}$ signal via multiplexer D916 and a new sampling cycle is started.

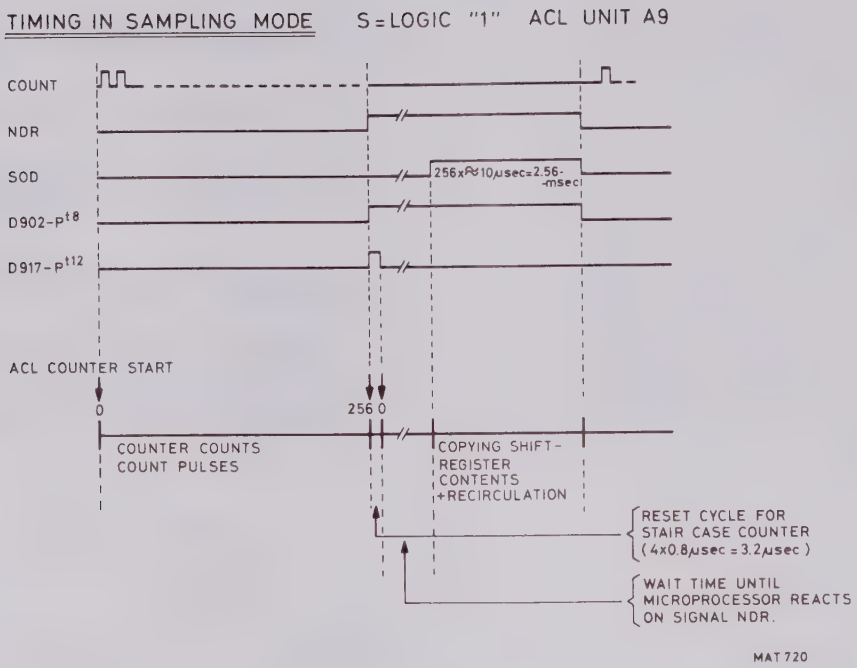

Fig. 6.2.33.

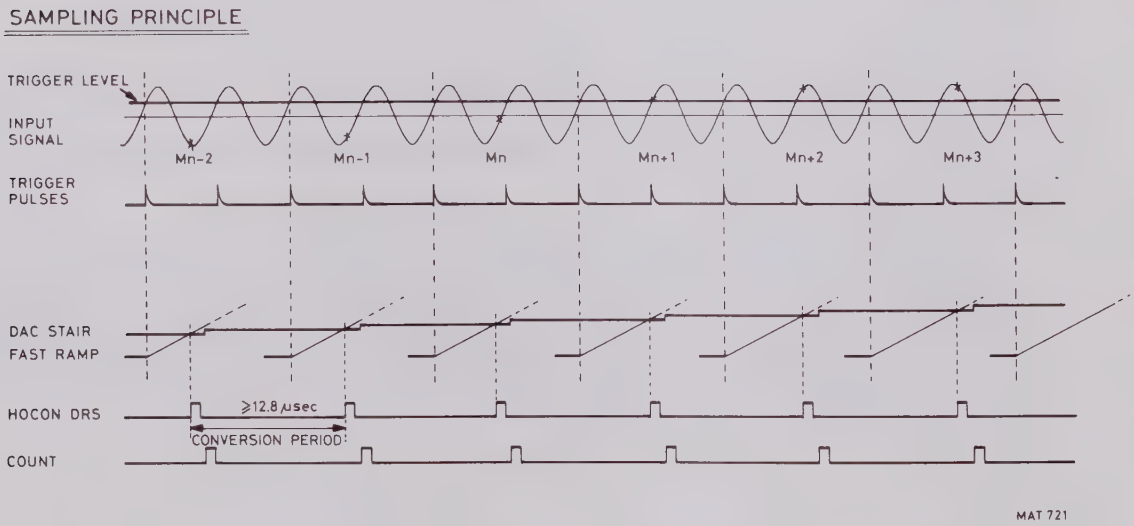

Fig. 6.2.34.

6.2.9.6. Flip-flop FASA

The flip-flop FASA stores the information indicating whether the last sample stored in the shift register was from channel A or channel B.

FASA = 1 : channel A was last sample
FASA = 0 : channel B was last sample

In the P-mode, the flip-flop FASA is set to the level of its D-input signal PDRIVE by the leading edge of every INS pulse on its clock input while the PR signal is logic 1 (CHOP is permanently at logic 1 in the P-mode).

In the DRS modes, flip-flop FASA is switched to the level of its D-input signal CHOP by the leading edge of every INS pulse on its clock input (signals PR and PDRIVE are permanently at logic 1 in the DRS modes).

The state of flip-flop FASA cannot be changed while NDR is logic 1, i.e. during the copying of the shift register contents into the ACCU memory. During this cycle the flip-flop state is read by the software.

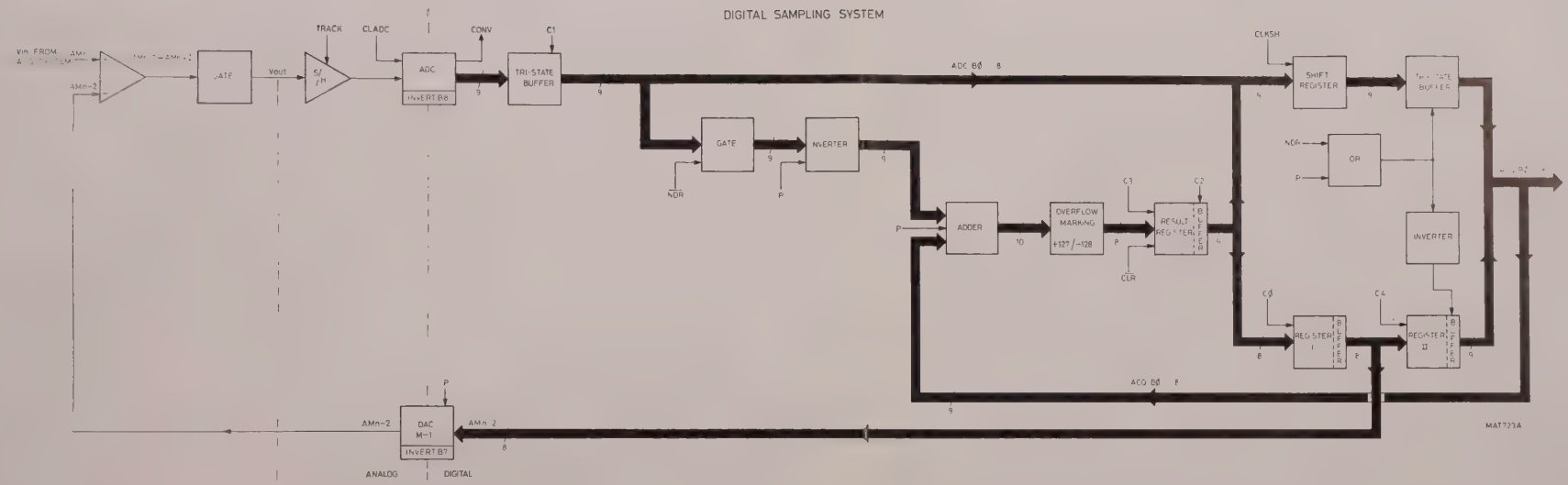

Fig. 6.2.35.

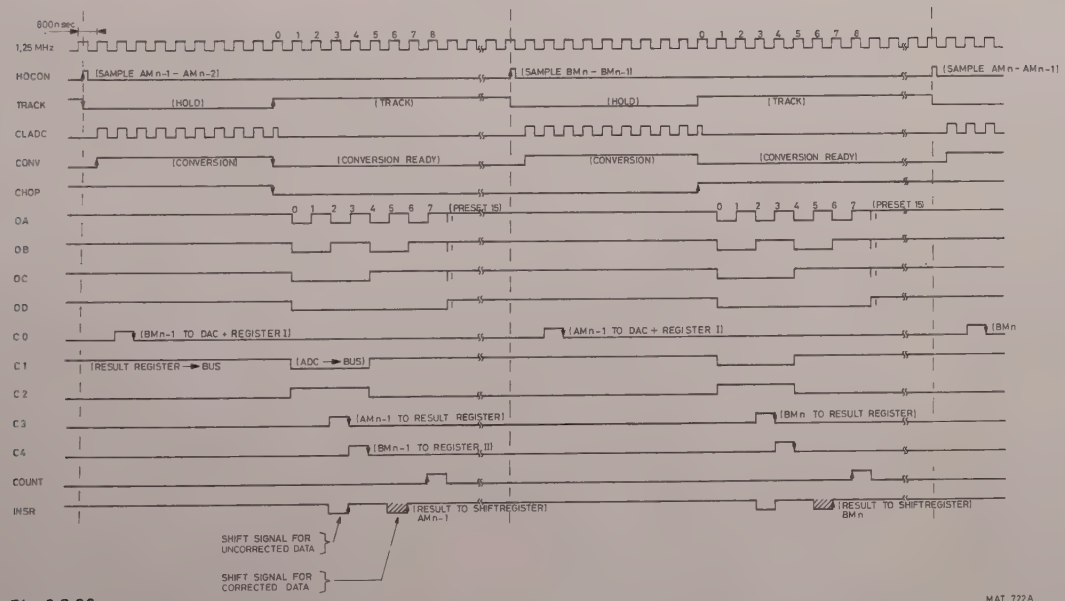

Fig. 6.2.36.

INCOMING SIGNAL	OUTGOING SIGNAL	GENERATED ON UNIT	USED ON UNIT	DESCRIPTION
$\overline{\text{AUTRI}}$		A13		Auto trigger
	CØ	A9	A7	Control Ø signal
	C1	A9	A8	Control 1 signal
	C2	A9	A8	Control 2 signal
	C3	A9	A8	Control 3 signal
	C4	A9	A7	Control 4 signal
	$\overline{\text{CHOP}}$	A9	A21	Chopper signal
	CLADC	A9	A8	Clock signal for ADC
$\overline{\text{CLR}}$		A4		Clear signal for shift register
	CLR	A9	A8	Inverted CLR signal
CONV		A8		Conversion
	$\overline{\text{CTF}}$	A9	A13	Clear signal for trigger flip-flop
D		A12		D-mode signal
	DACSTAIR	A9	A22	Output signal of DAC STAIR
DELTRIG		A13		Delayed trigger signal
	$\overline{\text{EOCØ}}$	A9	A9	Enable output COUNT Ø
$\overline{\text{EOC1}}$		A3		Enable output COUNT 1
	FASA	A9	A202	Output phase flip-flop
	$\overline{\text{FOE}}$	A9	A10	Frequency output enable
HOCON DRS		A22		Hold and convert signal in D-R and S mode
HOCONP		A10		Hold and convert signal in P-mode
	INS	A9	A7	Shift command for shift register
	NDR-$\overline{\text{NDR}}$	A9	A4-7-8	New data ready
	NULIN	A9	A21	Signal to switch vert. ampl. input to zero
P		A12		P-mode signal
PDRIVE		A10		Phase signal in P-mode
	PRES	A9	A10	Enable signal in P-mode.
R		A12		R-mode signal
S		A12		S-mode signal
$\overline{\text{SOD}}$		A4		Microprocessor serial output data
	TRACK	A9	A8-A22	Track command for S/H circuit
50 kHz		A12		50 kHz pulse
1,25 MHz		A12		1,25 MHz pulse
+5 V		A15		
−12 V		A15		
+12 V		A15		
⏚		A15		

TEST POINTS	
X901	$\overline{\text{FOE}}$
X902	NUL IN
X903	HOCONDRS
X906	NDR
X907	TRACK
X908	CØ
X909	CLADC
X911	CONV
X912	C3
X913	C4
X914	C1
X916	EOCØ/EOC1

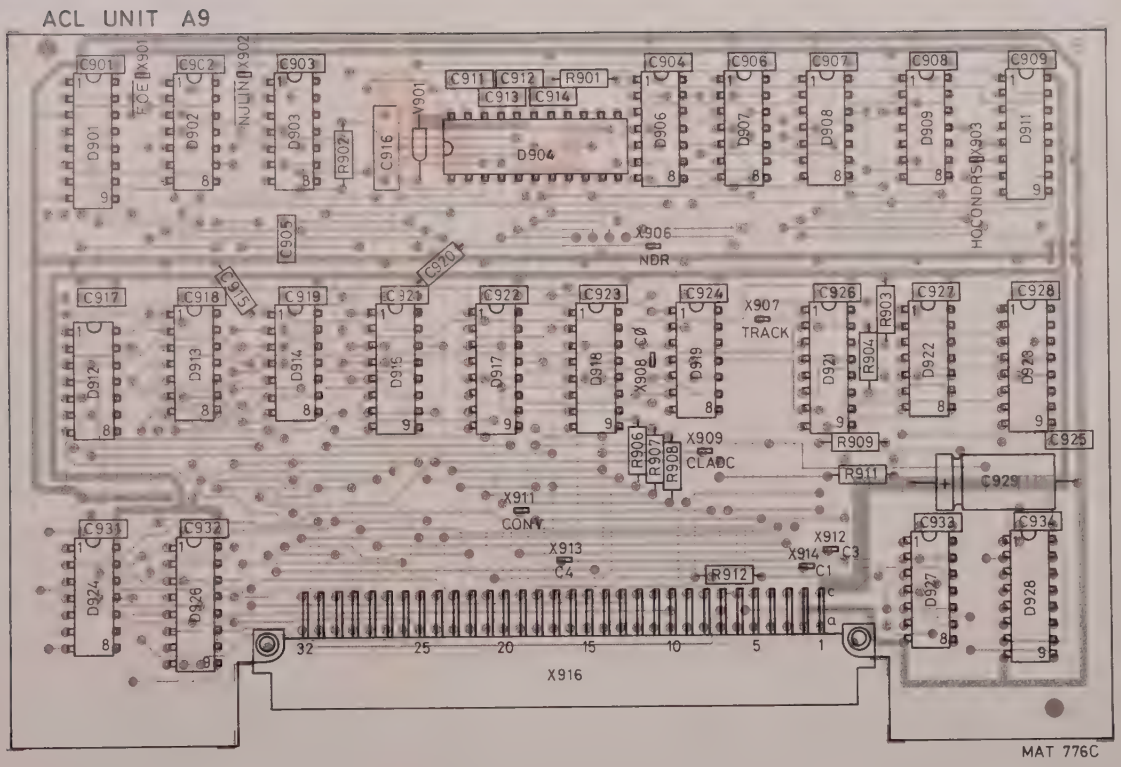
ACL UNIT A9
C901
C902
C903
C904
C906
C907
C908
C909
C911
C912
R901
C913
C914
D901
D902
D903
D904
D906
D907
D908
D909
D911
R902
C916
V901
X901 ECE
X902 NJUN
X903 HOCONDRS
C905
C915
C920
X906 NDR
C917
C918
C919
C921
C922
C923
C924
C926
C927
C928
D912
D913
D914
D915
D917
D918
D919
D921
D922
D923
X907 TRACK
R903
R904
X908 CØ
R906
R907
R908
X909 CLADC
R909
C925
R911
C929
C931
C932
C933
C934
D924
D926
D927
D928
X911 CONV
X912
X913 C4
X914
C3
C1
R912
32
25
20
15
10
5
1
X916
MAT 776C

Fig. 6.2.37.

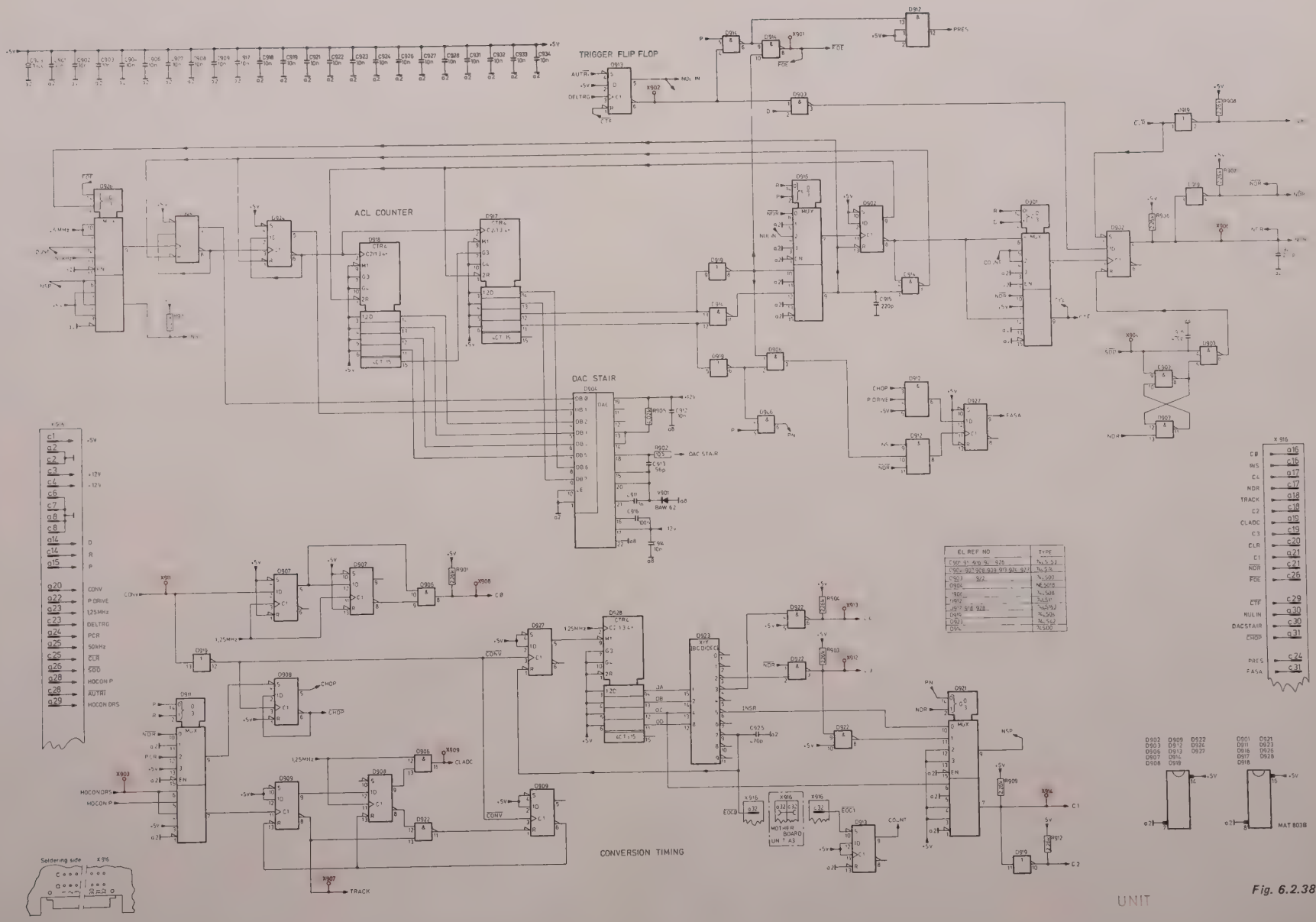

EL REF NO	TYPE
D901 911 916 921 926	74LS153
D902 907 908 909 913 924 927	74LS74
D903 922	74LS00
D904	NE5018
D906	74LS08
D912	74LS11
D917 918 928	74LS93
D919	74LS04
D921	74LS42
D914	74S00

Fig. 6.2.38.

6.2.10. CCD logic unit A10

6.2.10.1. General

The CCD logic unit together with the driver unit A34 control the correct functioning of the P^2CCD circuit on unit 11. The control circuits can be considered under the following headings:

- circuits for various supply voltages
- P^2CCD external output circuits
- control signals generator
- clock-pulse generator (on unit A34 page 6-232)

6.2.10.2. Circuits for various supply voltages

+11,4V — From the +12V supply a stabilised +11,4V is derived by the circuit consisting of D3223 (1,2,3) and transistors V3216 and V3211.
This +11,4V supply output can be adjusted by potentiometer R3273 at the input of D3223.

−11,4V — A −11,4V stabilised supply voltage is derived from the −12V supply by the circuit consisting of D3223 (5,6,7) and transistors V3217 and V3212. The level of the −11,4V supply is controlled by the stabilised +11,4V on resistor R3299.

+5B — A +5V stabilised supply voltage is derived from the +11,4V at input 1 of D3224.

BIAS — The bias voltage for the input signal circuitry of the P^2CCD is derived from the stabilised 11,4V by means of the circuit comprising D3201. The output voltage is applied to three adjusting potentiometers which are active in different time base positions. The outputs of the potentiometers are connected with multiplexer D3202 which is controlled by the signals TA and TB. These two signals are derived from the time base unit A12.

Resumed:

Time base position	Potentiometer	TB	TA
0,2 ms/div ... 1μs/div	R3206	0	0
0,5μs/div	R3221	0	1
0,2μs/div	R3207	1	0

The output of the multiplexer is routed via amplifier D3203 and relevant components to the P^2CCD circuit.

6.2.10.3. P^2CCD external output circuits

Output signals OUT PA and OUT PB (from the two sections of the P^2CCD on unit 11) are applied to two output circuits comprising two multiplexers D3221, D3222 and two integrators consisting of operational amplifiers D3213, D3219 and capacitors C3210, C3222.

In order to obtain a possibility to adjust the zero level for the different time base positions, a corrected zero signal is applied to the upper sections of the two multiplexers D3221 and D3222.
These zero signals are derived from the circuit built up around the lower section of multiplexer D3202. This circuit is organised analog to the bias circuitry.

Resumed:

Time base position	Potentiometer	TB	TA
0,2ms/div ... μs/div	R3208	0	0
0,5μs/div	R3222	0	1
0,2μs/div	R3209	1	0

Both output circuits serve to eliminate output source-follower drift, noise signals and clock-pulse or reset crosstalk signals that would influence the P^2CCD output signals.

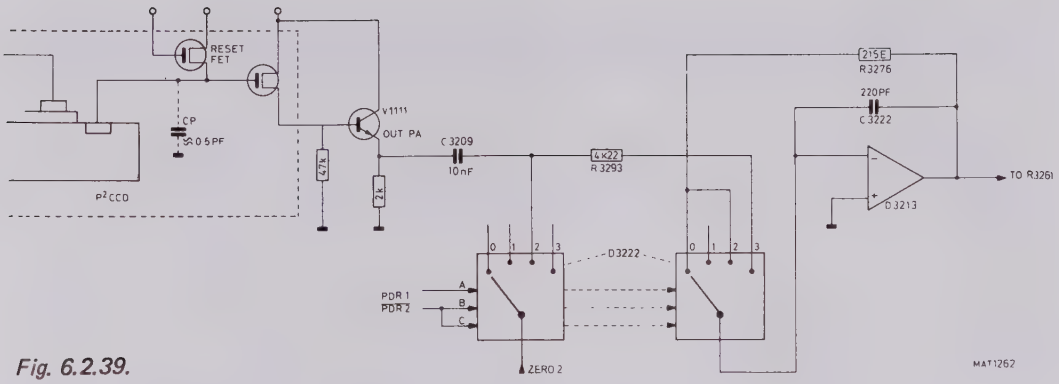

Fig. 6.2.39.

As a result, clean output signals are produced, which are applied via multiplexer D3206 and amplifier stage D3204 to the conversion unit A8 as the V OUT signal.

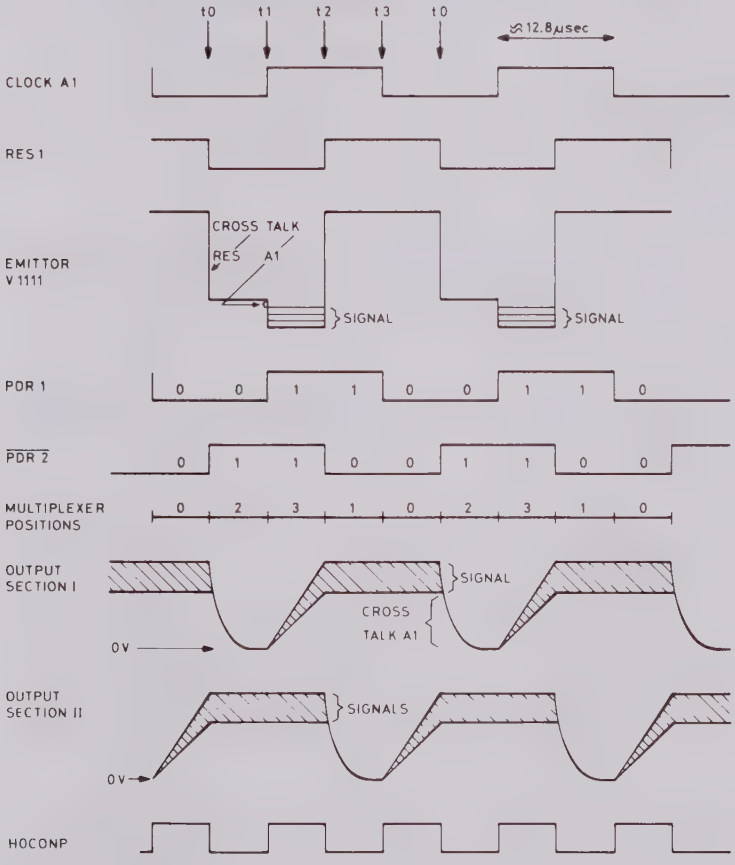

Fig. 6.2.40.

Before time t_o, signal RES1 is at logic 1, which causes the P^2CCD reset FET to conduct. The parasitic capacitor C_p of the source-follower gate is then charged to the level of the DRAIN RS1 voltage.

At the moment t_o, signal RES1 switches to logic 0 and the reset FET goes non-conducting.
Due to the crosstalk of signal RES1 present on the source-follower gate, a voltage jump appears on the emitter of transistor V1111.

During the time between t_o and t_1, the analog multiplexer D3222 is set to position 2 by its control signals PDR1 and $\overline{\text{PDR2}}$. Capacitor C3209 is then charged to the level on the emitter of V1111. At the same time, integrator capacitor C3222 will be discharged to 0V via position 2 of the multiplexer.

At t_1 (the positive-going edge of the clock-signal A1), a signal sample is fed to the source-follower gate, which results in a change of the voltage across C_p. This voltage across C_p is also influenced by crosstalk from the clock-signal A1. The emitter of transistor V1111 follows the voltage changes across C_p.

During the time between t_1 and t_2, the multiplexer D3222 is set to position 3. The difference between the emitter voltage of V1111 and the voltage across C3209 is now applied across R3293 and is integrated by the circuit D3213 and C3222. As can be seen from the timing diagram, the crosstalk of RES1 is now completely suppressed.

During the time between t_2 and t_3, the analog multiplexer switches to either position 1 or 0, but the multiplexer is not then enabled (signal PDR2 on the enable input G4). The output voltage therefore remains available on pin 6 of D3213.

A similar external output circuit is available for signal OUT PB, resulting in integrated voltages on pin 6 of D3219. Because of the differences in control signals PDR1 and PDR2, the signals are 180° phase-shifted.

The signals that are read into the P^2CCD for temporary storage need to be converted into digital information for permanent storage in a digital memory.
For this purpose, the output signals on pins 6 of D3213 and D3219 are applied to a multiplexer, D3206.

This multiplexer switches both P^2CCD output signals to one single serial output signal V OUT, when P-mode is selected (signal P at logic 1).
Signal PDR2 is reponsible for switching over from output section I to output section II. For the DRS modes the multiplexer D1008 switches the signal DRS to its output V OUT.

Amplifier stage D3212 is switched as an inverter.
This is necesarry to correct for the different phase of the signal in the P^2CCD.
Preset potentiometers provide gain adjustment for the two P^2CCD sections at different time base settings.
Signal V OUT is applied to conversion unit A8.

6.2.10.4. Control signals generator

In the P-mode, the signals P, PRES, $\overline{FOE}$ and 78kHz are converted from TTL to ECL by D3218.
As long as gignal PRES = logic 1, these signals control the two D-type flip-flop D3217, which generate the signals WREP and RDEP.

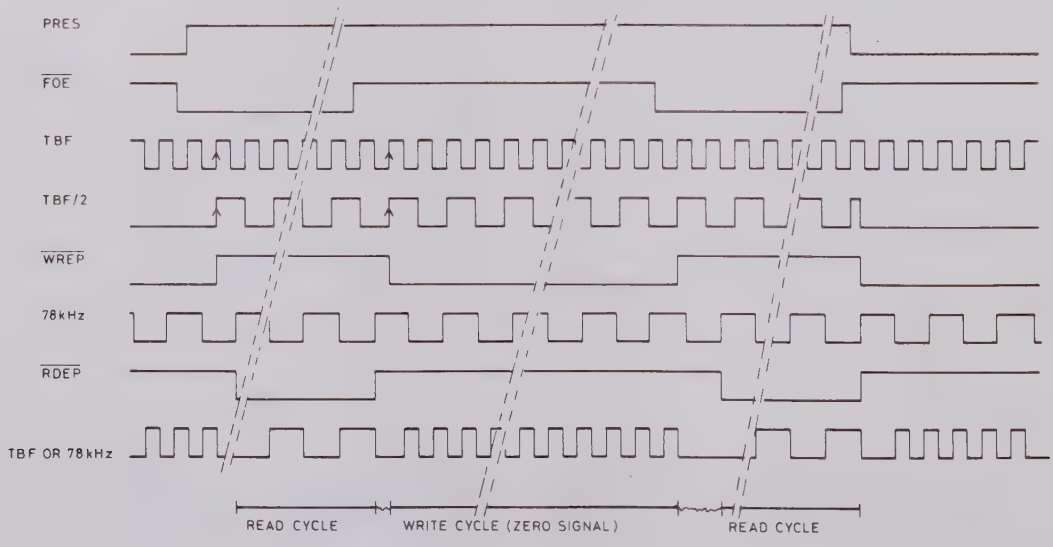

Fig. 6.2.41.

As shown in the timing diagram, during the time that signal $\overline{WREP}$ = logic 0, new signal samples will be shifted into the P^2CCD with a clock-frequency signal derived from signal TBF. (WREP: WRITE ENABLE P-MODE).

Signals WREP and $\overline{\text{WREP}}$ are only switched synchronously with even TBF pulses (TBF/2) in order to achieve precise zero-correction (see ACL unit A9). This is realised by dividing the TBF pulses using the lower flip-flop of D3216, resulting in signal TBF/2, which is used as a clock-signal for flip-flop WREP.

During the time that signal $\overline{\text{RDEP}}$ = logic 0, the P2CCD contents are shifted out with a clock-frequency derived from signal 78 kHz.

Signals RDEP and $\overline{\text{RDEP}}$ are only switched synchronously with the 78 kHz signal.
(RDEP: READ ENABLE P-MODE).

The signal on pin 10 of NOR-gate D3208 is built up by TBF or 78kHz.
This signal, which is applied to pin 6 of D3209, is also inverted by D3208 and applied to pin 11 of D3209. These flip-flops and the associated circuits that follow (D3211, D3214) generate the signals listed below in accordance with the timing diagram.

RES1:	Reset signal for P2CCD output section I
RES2:	Reset signal for P2CCD output section II
P DRIVE:	P2CCD phase signal
PDR1 & PDR2:	Control signals for multiplexers D1018, D1019 and D1008
CLKDR:	Drive signal for clock-pulse generator.

Integrated circuits D3214 are ECL/TTL converters of which one output is connected to an internal reference voltage of −1,2V.

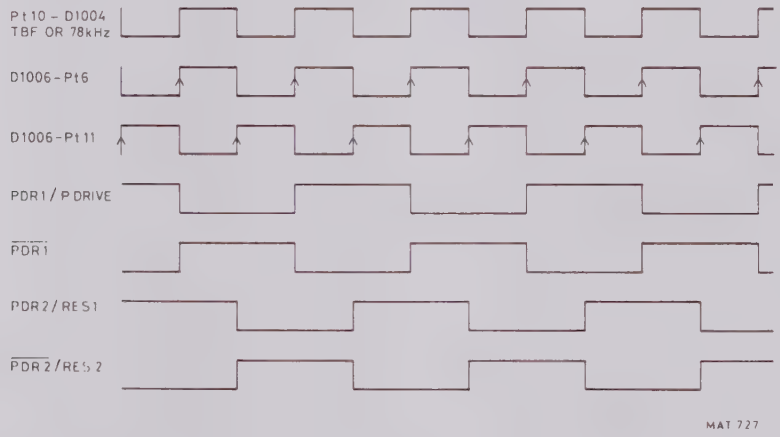

Fig. 6.2.42.

The whole system is inactive while signal $\overline{\text{PECL}}$ from the time-base unit is at logic 1. Signal P DRIVE will then be permanently at logic 1.
Furthermore, the generation of signals PDR1, PDR2, $\overline{\text{PDR2}}$, PDRIVE, RES1 and RES2 is inhibited while signal WREP is at logic 1. This signal is at logic 1 during the reading of new signal samples into the P2CCD. Signals RES1 and RES2 are then positive to open the reset FET during reading in.

Signal HOCONP (Hold and Convert in P-mode)

HOCONP pulses are only generated during the reading of the P2CCD contents. These pulses are derived from the 78kHz pulses via NOR-gate D3208 while signal $\overline{\text{RDEP}}$ = logic 0 (RDEP: READ ENABLE IN P-mode). Immediately the first P2CCD signal sample is available for conversion to digital, the leading edge of the first HOCONP pulse has already passed. Therefore, this analog-to-digital conversion has to be started on the second HOCONP pulse.
For this reason, the first HOCONP pulse is suppressed by the upper flip-flop of D3216 as shown in the following diagram.

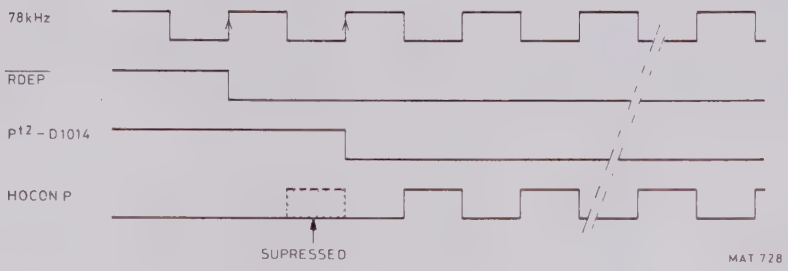

Fig. 6.2.43.

INCOMING SIGNAL	OUTGOING SIGNAL	GENERATED ON UNIT	USED ON UNIT	DESCRIPTION
	BIAS	A10	A11	Bias voltage
		A11		
$\overline{FOE}$		A9		Frequency output enable
OUTPA		A11		P^2CCD output signal section I
OUTPB		A11		P^2CCD output signal section II
P		A12		P-mode signal
$\overline{PECL}$		A12		P-mode signal for ECL circuits
PRES		A9		Enable signal in P-mode
	RES1	A10	A11	Reset signal 1
	RES2	A10	A11	Reset signal 2
78kHz		A12		78kHz pulse
	+11,4V	A10	A11/A34	
	+40V	A10	A11	
–5.2V		A15		
+6V		A15		
–6V		A15		
+12V		A15		
–12V		A15		
+40V		A15		
DRS		A21		Signal from T & H gate
TBF		A12		Time-base fast
	VOUT	A10	A8	CCD logic unit analog output signal
	HOCONP	A10	A9	Hold and convert in P-mode
	–5.2V	A10	A11/A34	
	–11.4V	A10	A11/A34	
	PDRIVE	A10	A9	Phase signal in P-mode
	ZERO	A10	–	–
	$\overline{P^2CCD\ clock}$	A10	A34	Clock for P^2CCD
	P^2CCD CLOCK	A10	A34	Inverted clock for P^2CCD
TA		A12		Control signal for P^2CCD adjustment
TB		A12		Control signal for P^2CCD adjustment

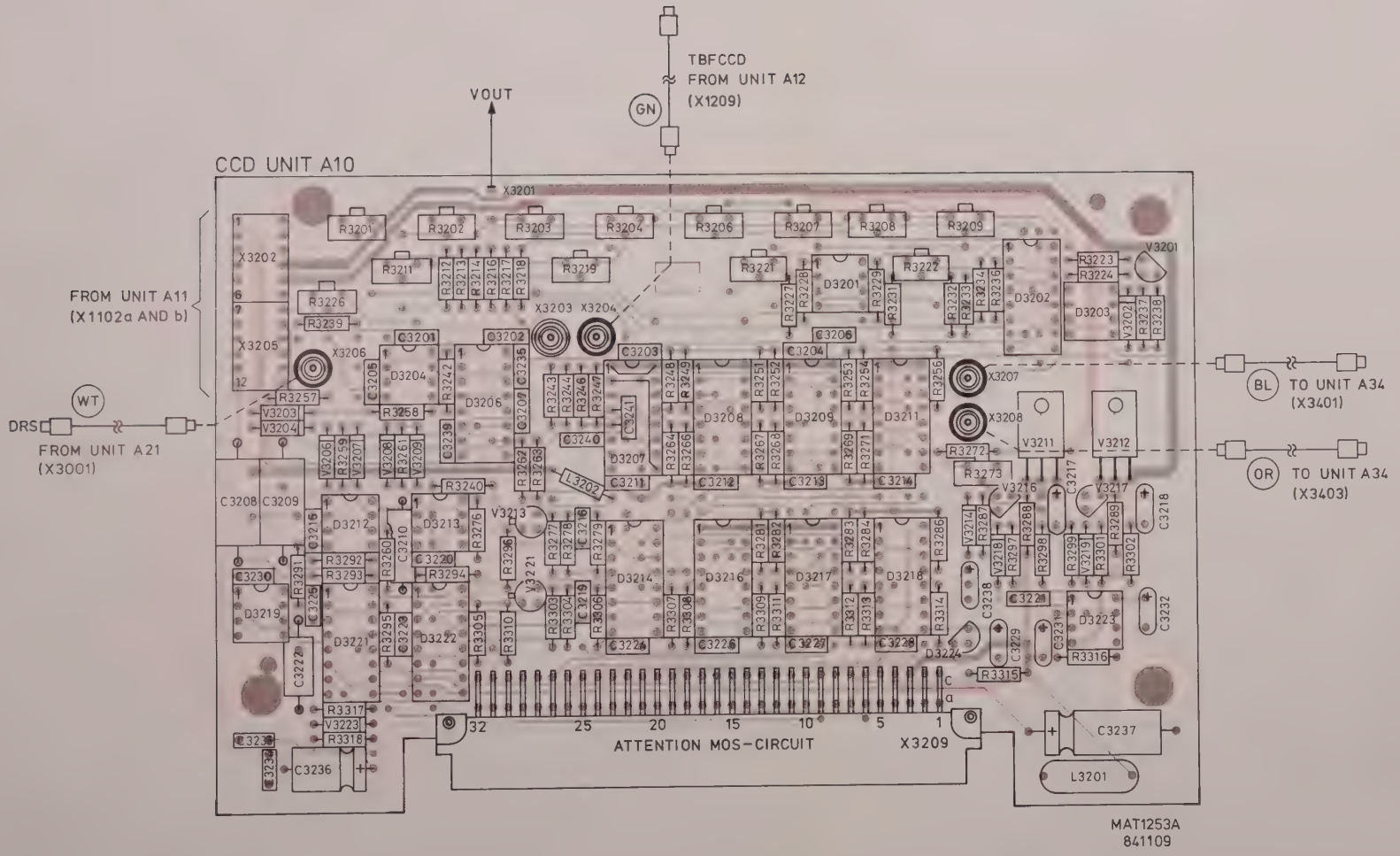
TBFCCD
FROM UNIT A12
(X1209)
GN
VOUT
CCD UNIT A10
X3201
FROM UNIT A11
(X1102a AND b)
WT
DRS
FROM UNIT A21
(X3001)
BL
TO UNIT A34
(X3401)
OR
TO UNIT A34
(X3403)
ATTENTION MOS-CIRCUIT
X3209
32
25
20
15
10
5
1
MAT1253A
841109

Fig. 6.2.45.

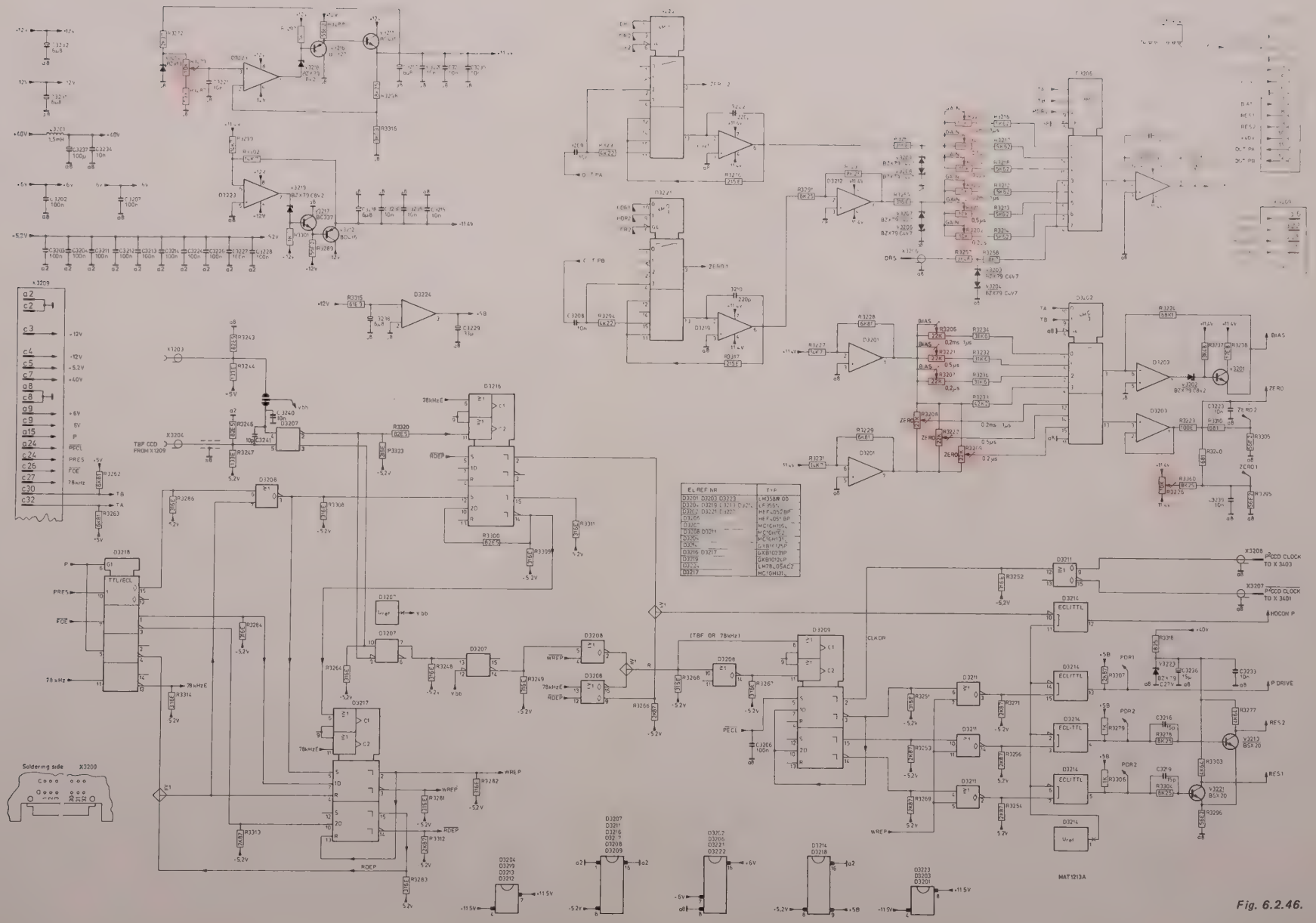

Fig. 6.2.46.

6.2.11. P²CCD unit A11

6.2.11.1. General

The P²CCD circuit (Profiled Peristaltic Charged Coupled Device) is used in this digital storage oscilloscope as an analog shift register. Using this circuit, different time conversions can be realised in the TIME/DIV switch positions 0,2µs/DIV up to 0,2ms/DIV to digitise fast input signals with a relatively slow (12,8µs approx.) analog-to-digital converter.
The P²CCD circuit D1101 located on unit A11 consists of two CCD sections in parallel. These two sections are required in order to take samples of the input signal on the 0° phase and on the 180° phase of the clock signal.

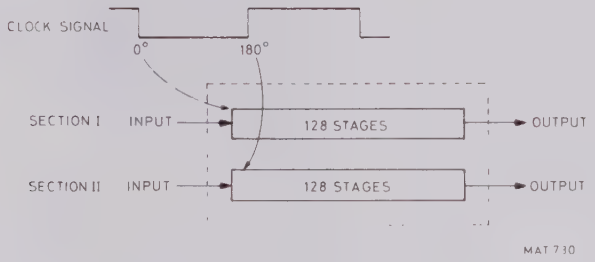

Fig. 6.2.47.

Each section consists of 128 stages, i.e. the complete circuit D1101 contains 256 stages in which a total of 256 samples can be stored.
In addition, each section consists of a system for the transport of charges, an input circuit that accepts the charges from the vertical channel switch signals P AMP OUT I and P AMP OUT 2, and an output section which measures the sizes of the charges and produces corresponding output signals.

Samples can be taken from the analog input signal at a high sample rate, which varies between 125 kHz and 125MHz depending on the TIME/DIV switch setting. These samples are shifted into the P²CCD.

After the reading in of information in all the 256 stages, the reading out cycle is started. The entire operation is carried out under the control of the acquisition control logic and the CCD logic unit.

The P²CCD circuit contents are read out with a lower frequency of 78 kHz approx.
This frequency remains the same for the different TIME/DIV switch settings and is low enough to guarantee perfect ADC conversion by the ADC on unit A8.
The frequency must not be too low otherwise loss of information could occur in the P²CCD circuit.

6.2.11.2. Input section

Each of the two sections of the P2CCD circuit has its own input section. One of these input sections is now described. This particular section has the following inputs:

IN1 (pin 22) — this input is connected to the clock signal P2 in such a way that the d.c. voltage level on IN1 is always about 13 V more positive than the P2 signal level.

P11IN (pin 21) — this is a threshold voltage set to +6 V approx.

A11IN (pin 17) — this is connected to the analog input signal P AMP OUT 1 with a maximum amplitude of 1 V peak-peak on a d.c. bias level of about +7,5 V.

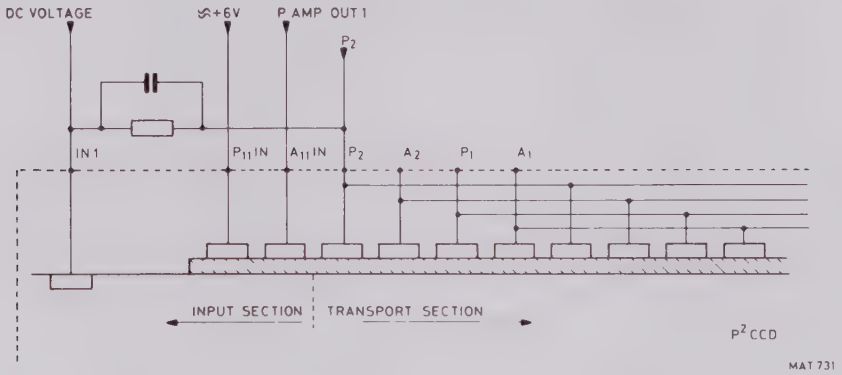

Fig. 6.2.48.

For correct sampling of the input signal, it is most important that the low level (+2 V) of the clock signal P2 remains constant. For higher frequencies, the amplitude of the clock signal P2 decreases due to the capacitive loading caused by the P2CCD circuit.
A control loop is used to ensure that the low level of P2 remains constant.
The clock signals P2 and P1 are measured by the circuit V1101, V1117, which results in a feedback signal CLF for the four-phase clock-pulse generator on unit A34.
(CLF = CLOCK AMPLITUDE FEEDBACK).

6.2.11.3. Transport section

The four clock signals P2, A2, P1 and A1 are used to shift information in and out of the P2CCD. These signals, generated on CCD logic unit A34, are derived from the 125kHz ... 125MHz input frequency (TBF) from the time-base circuit (A12) when reading in, and from a 78 kHz input frequency when reading out.

Each stage inside the P2CCD consists of four gates that are isolated from each other, and are controlled by the four clock signals as shown in the following diagram.

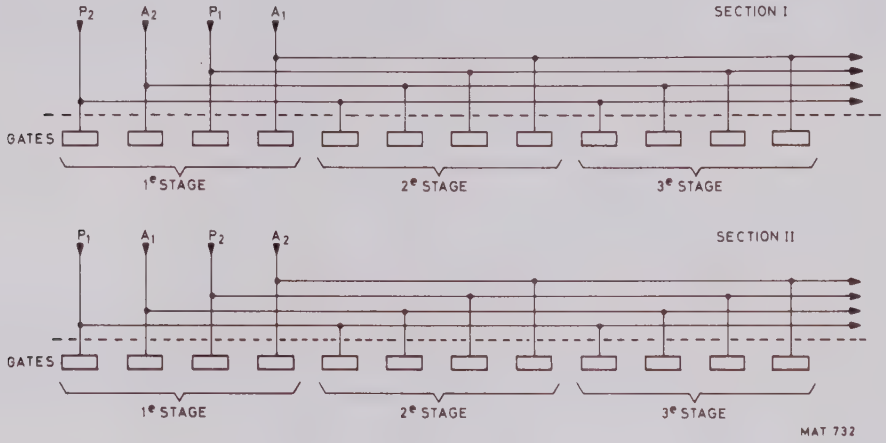

Fig. 6.2.49.

The charges are transported in the following way:

Assume for instance that a negative charge is brought under a positive gate. If the next gate is made positive and the previous gate is made negative, the charge will be repelled in the direction of the position gate.

Displacement of charges is achieved in practice by changing the levels on the gates by the four periodically changing clock-pulses. For a description of the clock-pulse generator, refer to unit A10.

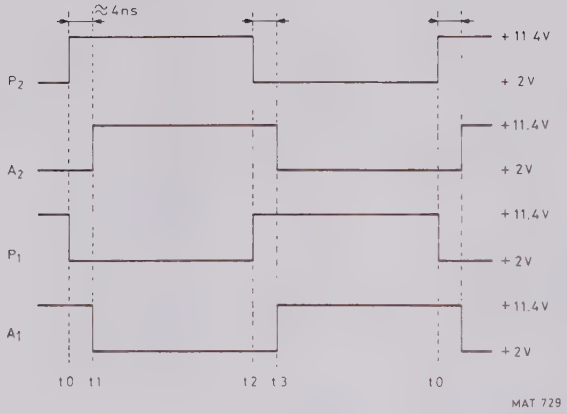

Fig. 6.2.50. Timing clock signals

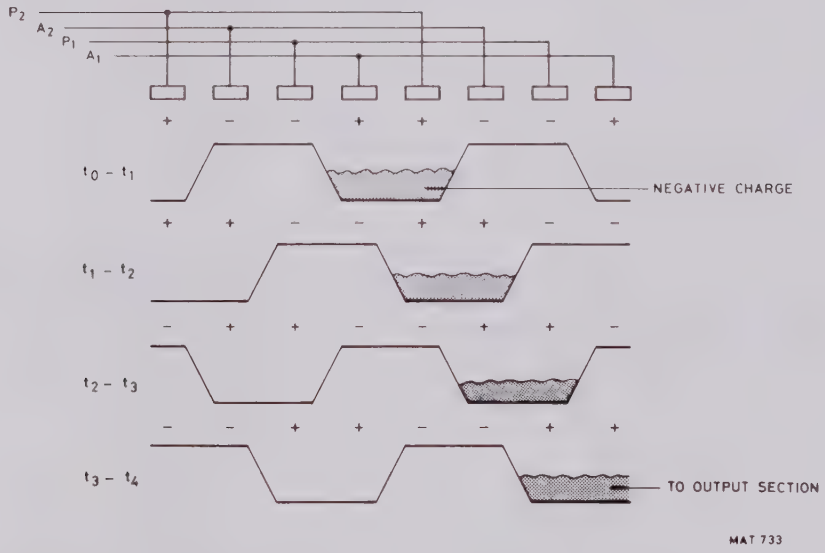

Fig. 6.2.51. Displacement of a negative charge as a function of the clock voltages.

6.2.11.4. Output section

Each of the two P2CCD sections has its own output stage, as now described.

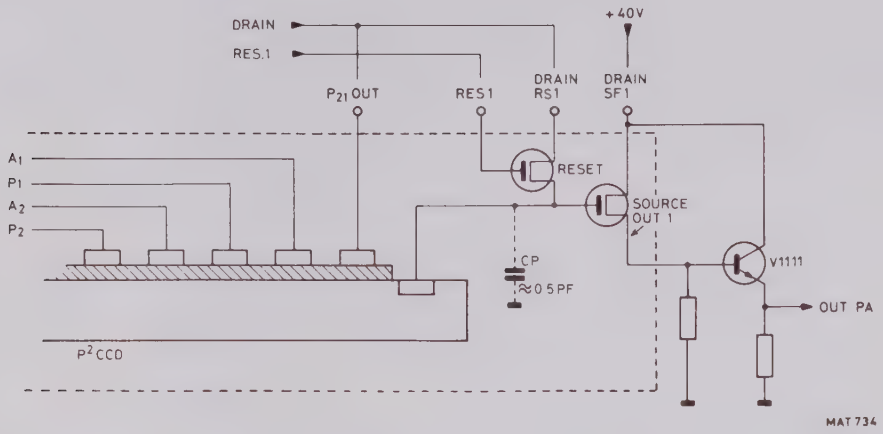

Fig. 6.2.52.

On every positive-going edge of the clock signal A1 a charge will load the parasitic capacitor C_p of the source-follower gate (previously discharged to the DRAIN RS1 voltage level by the reset FET).

The level across C_p will leave the output section via the appropriate source-follower. Both FET transistors are also part of the P2CCD circuit.
The output signal is approx. 100 mV for an input signal (Vin) of 1 Vp-p.
This source-follower output signal is applied to an emitter-follower V1111 which in turn feeds it as signal OUTPA to an output amplifier on unit A10.

6.2.11.5. P2CCD circuit in dual-channel mode

In the dual-channel mode, channel A signal is shifted to section I and channel B to section II. The clock signals for the two sections are in anti-phase, which results in a situation where the P2CCD itself acts as a chopper.
The chopper frequency depends on the TIME/DIV switch setting.
This dual-mode of working results in 128 samples per channel being stored, instead of 256.

INCOMING SIGNAL	OUTGOING SIGNAL	GENERATED ON UNIT	USED ON UNIT	DESCRIPTION
BIAS		A10		Bias voltage
	CLF	A11	A10	Clock-pulse amplitude feedback
	OUTPA	A11	A10	P^2CCD output signal section I
	OUTPB	A11	A10	P^2CCD output signal section II
RES1		A10		Reset signal 1
RES2		A10		Reset signal 2
+11,4V		A10		
+40V		A10		
		A10		
PAMPOUT1		A21		Output signal of amplifier
PAMPOUT2		A21		Output signal of amplifier
–5,2V		A10		
–11,4V		A10		
	A1		A34	To 50Ω terminator
	A2		A34	To 50Ω terminator
		A34		Clock pulse
P1		A34		Clock pulse
P2				

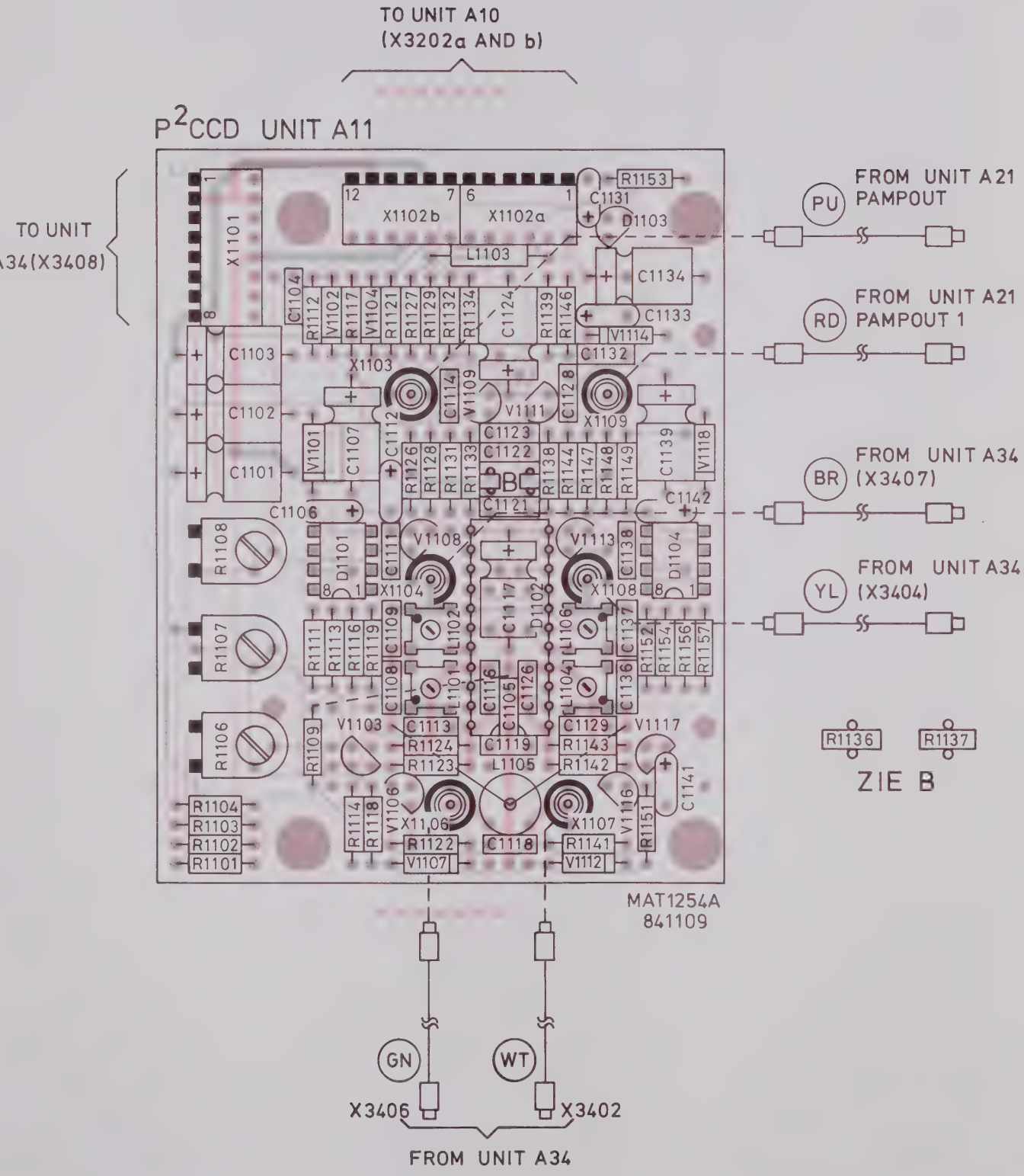
TO UNIT A10
(X3202a AND b)
P2CCD UNIT A11
TO UNIT
A34(X3408)
FROM UNIT A21
PAMPOUT
PU
FROM UNIT A21
PAMPOUT 1
RD
FROM UNIT A34
(X3407)
BR
FROM UNIT A34
(X3404)
YL
R1136
R1137
ZIE B
MAT1254A
841109
GN
WT
X3406
X3402
FROM UNIT A34

Fig. 6.2.53.

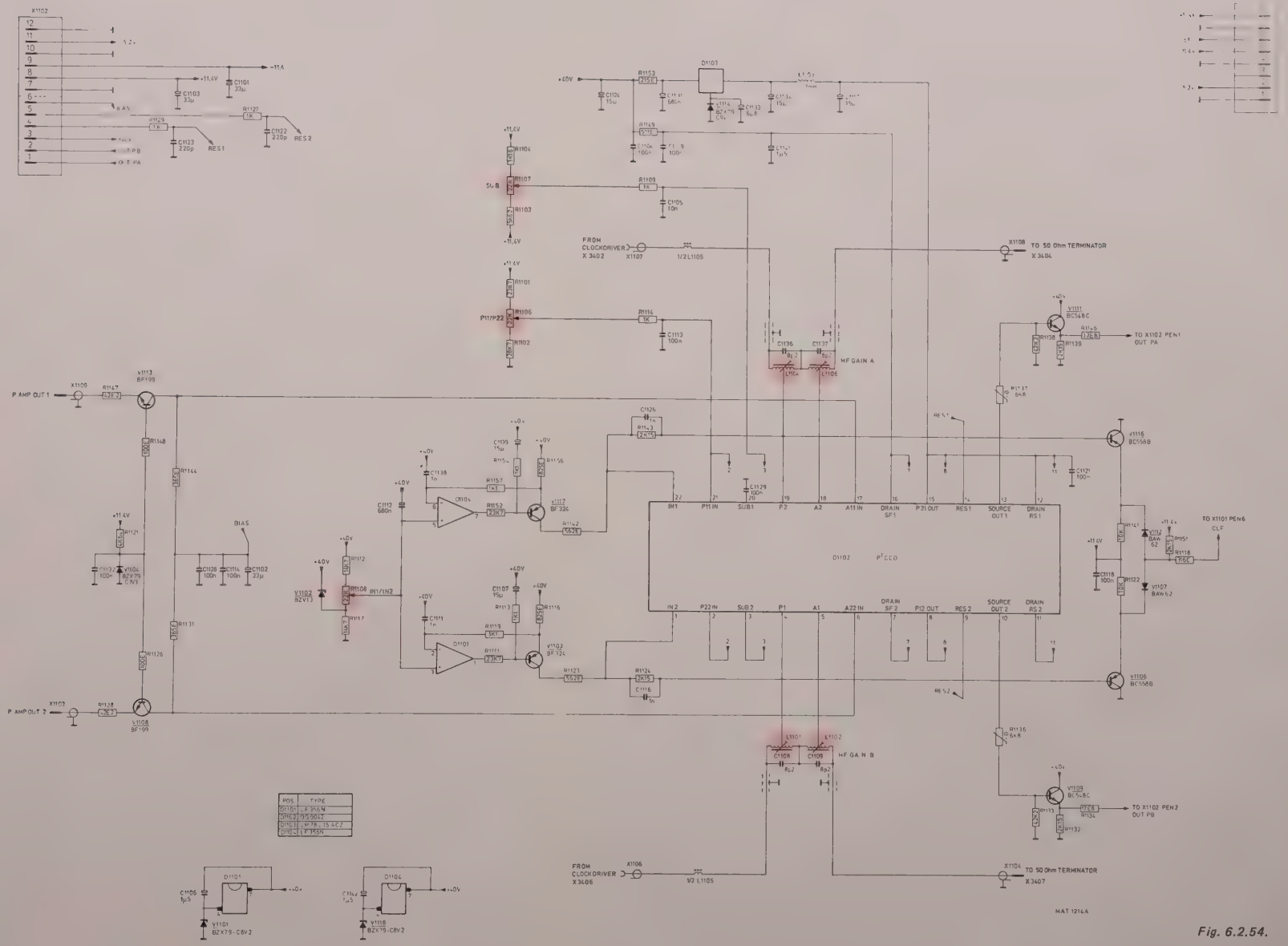
X1102
+11.4V
C1101
C1103
BIAS
R1127
1K
R1129
C1123
220p
RES1
C1122
RES 2
P.PB
O/T PA
FROM CLOCKDRIVER X 3402
X1107
1/2L1105
X1108
TO 50 Ohm TERMINATOR X 3404
SUB
R1104
R1107
R1109
C1105
10n
R1103
P11/P22
R1101
R1106
R1114
C1113
100n
R1102
HF GAIN A
L1104
L1106
TO X1102 PEN1 OUT PA
P AMP OUT 1
X1106
V1113 BF199
R1147
R1148
R1144
R1131
R1126
P AMP OUT 2
X1103
R1128
V1108 BF199
V1102 BZV13
R1112
R1108
IN1/IN2
R1117
C1112 680n
C1138
C1139
R1156
R1157
R1152
V1117 BF324
R1142
C1126
R1153
C1129
C1107
R1113
R1116
R1111
V1103 BF324
R1127
R1124
C1116
IN1 P11 IN SUB1 P2 A2 A11 IN DRAIN SF1 P21 OUT RES1 SOURCE OUT1 DRAIN RS1
IN2 P22 IN SUB2 P1 A1 A22 IN DRAIN SF2 P12 OUT RES2 SOURCE OUT2 DRAIN RS2
D1102 P²CCD
V1116 BC558B
V1106 BC558B
C1121
C1118
R1122
V1107 BAW62
TO X1101 PEN6 CLF
RES1
RES2
L1101
L1102
HF GAIN B
C1108
C1109
R1136
V1109 BC548C
R1133
R1134
R1132
TO X1102 PEN2 OUT PB
FROM CLOCKDRIVER X3406
X1104
M2 L1105
TO 50 Ohm TERMINATOR X 3407
MAT 1214A
POS TYPE
D1101 BZX79-C8V2
D1103 BZX79-C5V6
D1104 BZX79-C8V2

Fig. 6.2.54.

6.2.12. Time-base unit A12

The time-base unit generates a number of control signals of different frequencies derived from the microprocessor clock-pulse output signal of 2,5 MHz.

6.2.12.1. Encoding TIME/DIV settings

Depending on the setting of the TIME/DIV switch, one of these frequencies is selected and applied to other units as signals TBF (time-base fast, used in P2CCD mode) or TBS (time-base slow, used for other modes).

The relation between the TIME/DIV switch settings and the signals TBF and TBS is such that there are always 25 pulses (TBF or TBS) generated per horizontal division.

The settings of the TIME/DIV switch are read by the microprocessor system (unit A2).
The microprocessor loads the 8-bit latch D1221 with a byte of data according to the TIME/DIV settings listed in the following table.
Latch D1221 is selected when the microprocessor generates address 8Ø6ØH.
When the microprocessor places this address on the address bus, signal $\overline{IO6}$ goes to logic 0.
This $\overline{IO6}$ signal combined with the $\overline{WR}$ signal enables data latch D1221 to latch the data present on the data bus.

The output signals of latch D1221 have the following functions:

DØ ... D4* — used to control the various multiplexers on time-base units A12.

D5* — enables or disables the output signal TBS.

D6* and D7* — these signals together, control decoder D1216, which results in the four mode signals:
- P – P2CCD mode
- D – Direct mode
- R – Roll mode
- S – Sampling mode

TIME/DIV	FREQUENCY	MODE	D7	D6	D5	D4	D3	D2	D1	DØ	TB	TA
5 ns/div		S	1	1	0	0	0	1	1	0	1	1
10 ns/div		S	1	1	0	0	0	0	0	1	1	1
20 ns/div		S	1	1	0	0	0	1	0	0	1	1
50 ns/div		S	1	1	0	0	0	1	0	1	1	1
0.1 µs/div		S	1	1	0	0	0	0	0	0	1	1
	TBF											
0.2 µs/div	125 MHz	P	0	0	0	0	0	1	1	1	1	0
0.5 µs/div	50 MHz	P	0	0	0	0	1	1	0	1	0	1
1 µs/div	25 MHz	P	0	0	0	0	1	1	1	0	0	0
2 µs/div	12,5 MHz	P	0	0	0	0	1	0	1	0	0	0
5 µs/div	5 MHz	P	0	0	0	0	1	0	1	1	0	0
10 µs/div	2.5 MHz	P	0	0	0	1	0	0	0	1	0	0
20 µs/div	1.25 MHz	P	0	0	0	1	0	0	1	0	0	0
50 µs/div	0.5 MHz	P	0	0	0	1	0	0	1	1	0	0
0.1 ms/div	0.25 MHz	P	0	0	0	1	1	0	0	1	0	0
0.2 ms/div	125 kHz		0	0	0	1	1	0	1	0	0	0
	TBS											
0.5 ms/div	50 kHz	D	1	0	1	0	0	0	0	0	1	1
1 ms/div	25 kHz	D	1	0	1	0	0	0	0	1	1	1
2 ms/div	12.5 kHz	D	1	0	1	0	0	0	1	0	1	1
5 ms/div	5 kHz	D	1	0	1	0	0	1	0	0	1	1
10 ms/div	2.5 kHz	D	1	0	1	0	0	1	0	1	1	1
20 ms/div	1.25 kHz	D	1	0	1	0	0	1	1	0	1	1
50 ms/div	500 Hz	D	1	0	1	0	1	0	0	0	1	1
0.1 s/div	250 Hz	D	1	0	1	0	1	0	0	1	1	1
0.2 s/div	125 Hz	D	1	0	1	0	1	0	1	0	1	1
	TBS											
0.5 s/div	50 Hz	R	0	1	0/1	0	1	1	0	0	1	1
1 s/div	25 Hz	R	0	1	0/1	0	1	1	0	1	1	1
2 s/div	12.5 Hz	R	0	1	0/1	0	1	1	1	0	1	1
5 s/div	5 Hz	R	0	1	0/1	1	0	0	0	0	1	1
10 s/div	2.5 Hz	R	0	1	0/1	1	0	0	0	1	1	1
20 s/div	1.25 Hz	R	0	1	0/1	1	0	0	1	0	1	1
30 s/div	5/6 Hz	R	0	1	0/1	1	0	1	0	0	1	1
60 s/div	5/12 Hz	R	0	1	0/1	1	0	1	0	1	1	1
120 s/div	5/24 Hz	R	0	1	0/1	1	0	1	1	0	1	1
360 s/div	5/72 Hz	R	0	1	0/1	1	1	0	0	0	1	1
900 s/div	5/180 Hz	R	0	1	0/1	1	1	1	0	1	1	1
1800 s/div	5/360 Hz	R	0	1	0/1	1	1	1	1	0	1	1
3600 s/div	5/720 Hz	R	0	1	0/1	1	1	1	1	1	1	1
					D5 = 1 → RUN D5 = 0 → STOP						1	1

6.2.12.2. Generation of signals 1.25 MHz, 0.5 MHz, 250 kHz, 156 kHz, 78 kHz

The 2.5 MHz clock-pulse signal from the microprocessor is divided by factors of 2,5 and 10 in divider D1206, resulting in signals 1,25 MHz (pin 11), 0.5 MHz (pin 12) and 250 kHz (pin 14) respectively.

Two other signals are derived from the 1.25 MHz signal by D1207, which divides by factors of 8 and 16. These divisions produce a signal of 156 kHz for use in the Z-amplifier and a signal of 78 kHz for reading out the contents of the P^2CCD unit.

6.2.12.3. Generation of TBS signals for the D and R modes

The 0.5 MHz signal on pin 12 of D1206 is applied to pin 2 of D1206, the first of a chain of dividers consisting of D1206, D1204, D1203, D1202 and D1201.
The first three of these divide by a factor of ten, thus producing the frequencies 50 kHz, 5 kHz, 500 Hz, 50 Hz and 5 Hz.
The 2.5 kHz output from D1204 pin 11 is applied via inverter D1218 (1, 2, 3) to the final amplifier unit A20 for generating the CAL voltage.

Pin 2 of D1203, normally at 500 Hz, can be switched to 2.5 MHz by switch S1201 for test purposes in the ROLL-Mode.

Circuit D1202 divides the 5 Hz input signal by a factor of 6 to give an output signal with a frequency of 5/6 Hz. In turn, D1201 divides this 5/6 Hz input signal by a factor of 12 if D2* is logic 0, and by a factor of 15 if D2* is logic 1, thus producing frequencies of 5/72 Hz or 5/90 Hz.

All these frequencies are routed to multiplexer D1214, the outputs of which are controlled by signals D2*, D3* and D4*.
Only one of the input frequencies appears on output 3 of D1214 and is applied in one of two ways to multiplexer D1219:

- directly to input 10 of D1219, or
- first divided in D1207 by factors of 2, 4 and 8 and then applied to inputs 11, 12 and 13 of D1219.

Multiplexer D1219 is controlled by signals DØ* and D1*.
The final selected frequency, obtained via NOR-gate D1217 as signal TBS, is applied to the trigger unit.
The output TBS can be disabled by flip-flop D1222, under the control of the D5* signal.
Signal TBS is blocked at the end of the ROLL-mode and in the P-mode. D* is then logic 0.

6.2.12.4. Generation of TBF signals for the P-mode

Signals of a higher frequency than the microprocessor clock-pulse output signal of 2.5 MHz are generated by means of a voltage-controlled oscillator (VCO) D1213 that has an output frequency of 100 MHz.
The output frequency of this oscillator is controlled by a d.c. voltage, VC_x on the VCO input, pin 2.
To obtain this stable VCO output, the 100 MHz output is divided by a factor of 80 in circuits D1227, D1209 and D1208. The resulting 1.25 MHz signal, VCO/80, is then compared with a reference signal of the same frequency in a phase detector, which is then used to control the VCO frequency.

The phase detector comprises the flip-flops D1211 and the associated integrator circuit. These flip-flops are set and reset in accordance with the timing diagram shown below.
The output signals on pins 1 and 12 are added and applied to pin 2 of D1212 of the integrator. The resulting signal VC_x controls the VCO to ensure a constant frequency. The VCO is only switched into circuit by signal VCOEN (VCO Enable) in the 5 TIME/DIV switch position 0,2µs/div to 5µs/div.

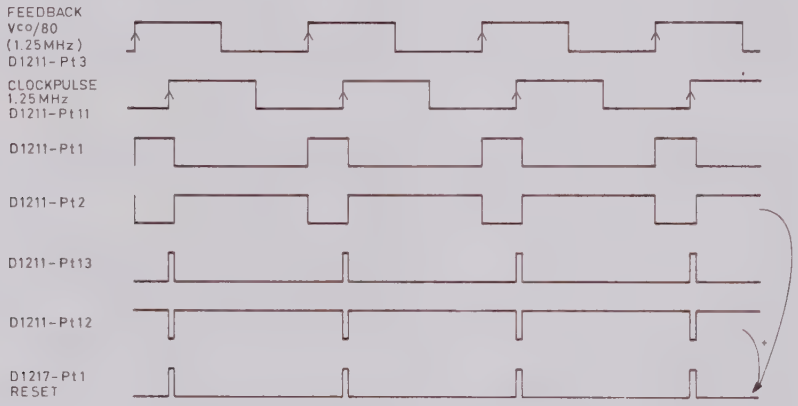

Fig. 6.2.55.

Divider D1227 derives the 50 MHz and 25 MHz signals from the 100 MHz VCO output signal, these being routed to multiplexer D1224 for selection.
The 25 MHz signal is also applied to a multiplexer D1223 via ECL/TTL converter D1231. This multiplexer selects one of the input signals 25 MHz, 2.5 MHz and 250 kHz under the control of signals D3* and D4*

The 25 MHz output signal from D1223 is divided in D1209 by a factor of 5 and a factor of 2. From there it is divided further in D1208 by a factor of 2, giving a signal VCO/80 of 1.25 MHz on output pin 12 of D1208. This is the 1.25 MHz signal that is fed back to the phase detector for controlling the VCO frequency.

In the position 0,2µs/div the VCO is adjusted to 125MHz.
The data lines D3* and D4* are both 0 in this position and thus is the multiplexer switching the signal VCO/100 as the feed-back frequency.
Now the frequency of 125MHz is available at output of 3 of D1232 and this signal is routed to inputs 3 and 13 of multiplexer D1224.

The following frequencies are also available:

output pin 9 of D1223: 25 MHz, 2.5 MHz or 250 kHz
output pin 8 of D1222: 12,5 MHz, 1.25 MHz or 125 kHz
output pin 2 of D1209: 5 MHz, 500 kHz (or 50 kHz - not used)

After selection by multiplexer D1219 (only enabled in P-mode), one of these frequencies appear on output pin 7 of D1219.

The selected signal is applied to multiplexer D1224 via a TTL/ECL converter, D1226.

Multiplexer D1224, which is controlled by DØ*, D1* and D2*, is employed for the final selection of the frequency of the output signal TBF. This signal is applied to the CCD logic unit A10 via a 50 Ω cable. In parallel, a TBF signal is generated, which is connected via a 50Ω cable to the trigger unit A13.

INCOMING SIGNAL	OUTGOING SIGNAL	GENERATED ON UNIT	USED ON UNIT	DESCRIPTION
	D	A12	A9	DIRECT-mode signal
DØ ... D7		A4		Data bits from system data bus
$\overline{IO6}$		A4		Address decoding signal TB select
	R	A12	A9	ROLL-mode signal
	S	A12	A9-A22	SAMPLE-mode signal
	P	A12	A7-8-9-10-21	P^2CCD-mode signal
	$\overline{PECL}$	A12	A10	P-mode signal from ECL circuits
	TBF CCD	A12	A10	Time-base fast for CCD unit
	TBF TRIGGER	A12	A13	Time-base fast for TRIGGER unit
	TBS	A12	A13-A22	Time-base slow signal
	50 kHz	A12	A9	
	78 kHz	A12	A10	
	2.5 kHz	A12	A20	2.5 kHz for CAL voltage
	156 kHz	A12	A15	
	1.25 MHz	A12	A9-13	
$\overline{WR}$		A4		Signal WRITE from microprocessor
2.5 MHz		A4		Microprocessor clock-pulse output signal
+5 V		A15		
–5.2 V		A15		

TEST POINTS	
X1201	RESET
X1202	LOW
X1203	5 Hz
X1204	156 kHz
X1208	VC_x

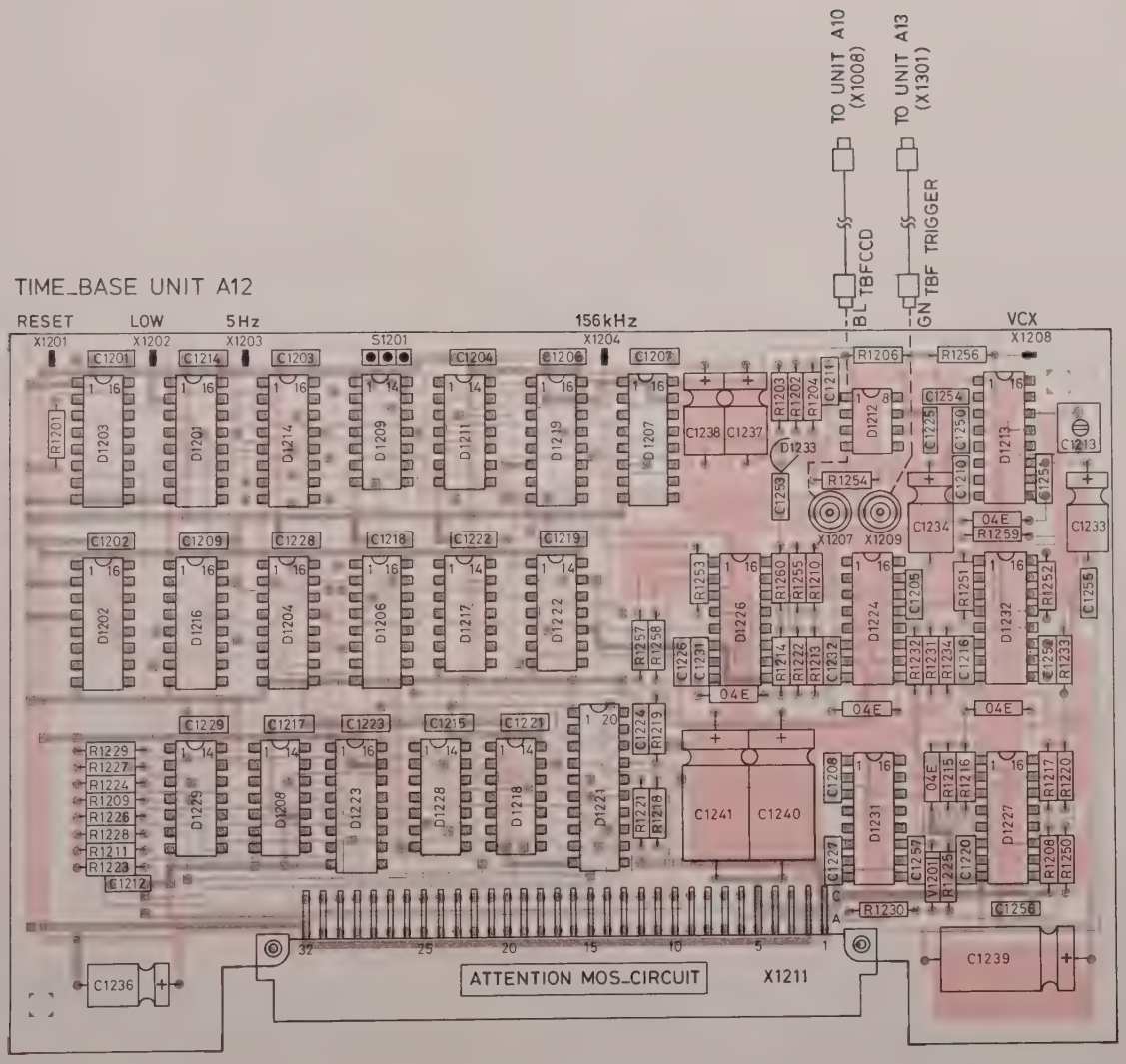
TIME_BASE UNIT A12
RESET
LOW
5Hz
156kHz
VCX
X1201
X1202
X1203
S1201
X1204
X1208
TO UNIT A10 (X1008)
TO UNIT A13 (X1301)
BL TBFCCD
GN TBF TRIGGER
ATTENTION MOS-CIRCUIT
X1211
MAT1656
841102

Fig. 6.2.56.

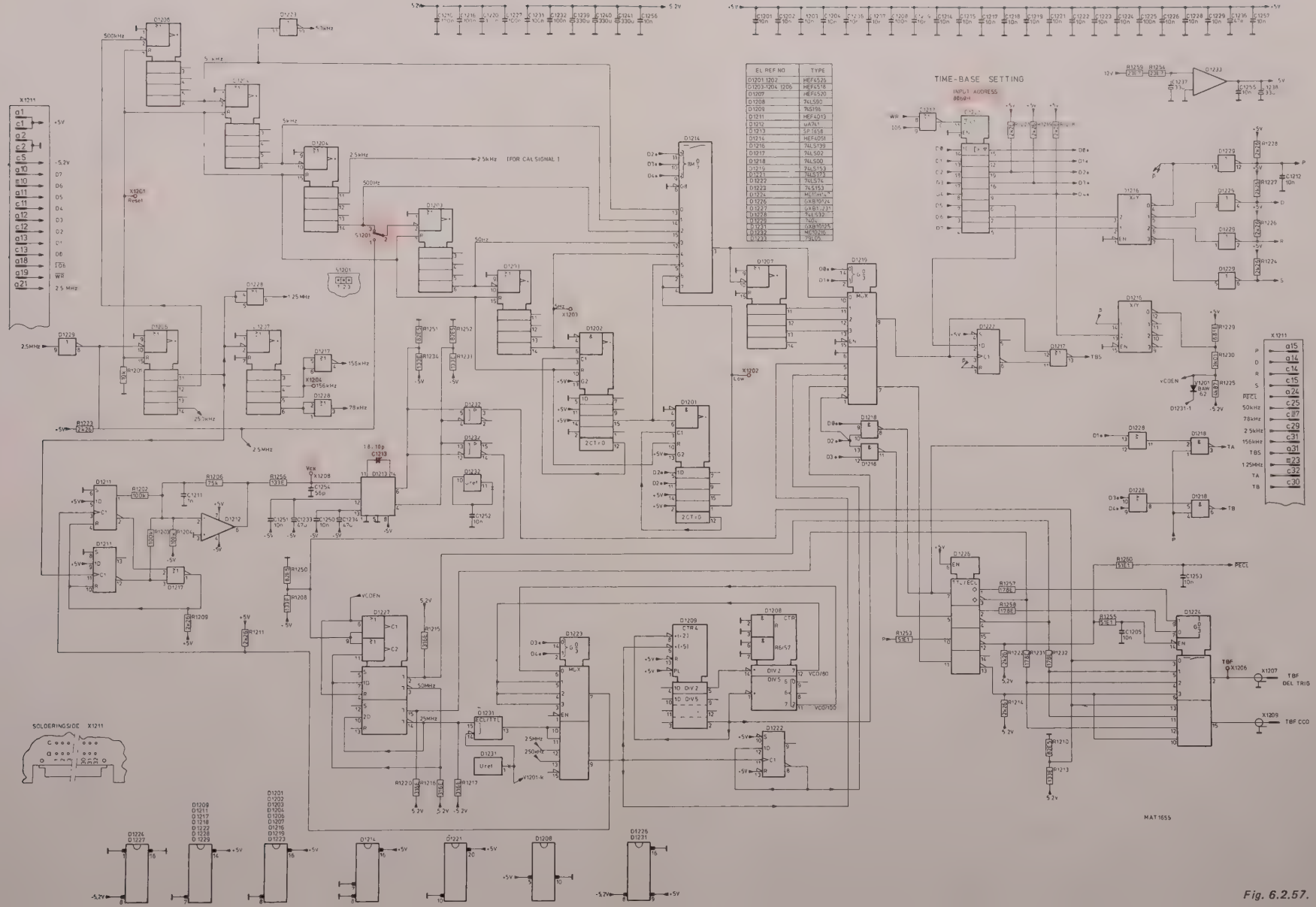
TIME-BASE SETTING
INPUT ADDRESS
SOLDERINGSIDE X1211
MAT1655

Fig. 6.2.57.

6.2.13. Delay trigger unit A13

The delay trigger unit comprises the following sub-circuits:

- The time-base AUTO circuit
- Plot output circuit and control signals for the dot-join circuit
- Down counters for trigger delay in Direct or P²CCD mode
- Digital-to-analog converter for trigger delay in Sampling mode

6.2.13.1. The time-base AUTO circuit

The time-base auto circuit consists of D1321 and its associated components. In the absence of the TRIST signal, i.e. no trigger pulse, and with the trigger switch in the AUTO mode, the trigger flip-flop of the ACL unit A9 requires a pulse to restart. This pulse is generated by D1321 output 4 and is referred to as the $\overline{\text{AUTR1}}$ signal.

A FRUN signal can enable the output pulse of the trigger unit A22. If no TRIST pulses are available, the re-triggerable monostable multivibrator D1321 (output 12) is at the rest position with output 12 at logic high. Together with signal AUTOTB, which is also high from the AUTO switch, output 6 of D1313 goes high. This output is the FRUN signal. As this time, D1321 output 4 is enabled and, on receipt of a $\overline{\text{CTF}}$ pulse, the $\overline{\text{AUTR1}}$ signal goes active low for 3 µs approx. to preset the trigger flip-flop on the ACL unit
A frequency of 1,25 MHz is applied at input 1 of D1321 to ensure that an $\overline{\text{AUTR1}}$ pulse occurs.

6.2.13.2. Plot output circuit and control signals for the dot-join circuit

The X OUT and Y OUT signals derived from the final amplifier unit A20 are applied to the sample-and-hold gates D1328 and D1329. At a particular moment, determined by the software, the data line D3 goes high for 30 µs approx. and D1328 and D1329 respectively will now hold the instantaneous values of X OUT and Y OUT for 17 ms approx. The outputs of the sample-and-hold gates are buffered by operational amplifiers D1319 and D1331 to obtain output voltages of 1 V full-scale for X and Y plotting.

The pen-lift circuit is controlled by a high level on data line D4 at the moment that D1318 is enabled. Changeover of the soldered dot-connection between D1323 and R1334 gives the possibility of active high or active low pen-lift operation. The output is an open-collector output with a maximum load capability of 1 A.

The following pulses are all derived from the $\overline{\text{WR}}$ pulse by a network of dividers and logic gates, and serve to control the dot-join circuit (final amplifier A20):
QØ and Q1; ZDJ and RESDJ, and TRSH.
The signals QØ and Q1 control the channel separation. Signal TRSH controls the sample-and-hold gates of the dot-join, the signal RESDJ serving to control the reset dot-join for the X channel. The ZDJ signal generates the blanking pulse on the microprocessor board and discharges the capacitor of the sawtooth generator on the final amplifier unit.

6.2.13.3. Down counters for trigger delay in Direct or P²CCD modes

The input of the counters may be the signal TBF or TBS. Signal TBF is at ECL-level at a frequency of 125 kHz ... 50 MHz. Conversely, the TBS signal is at TTL-level and at a frequency below 125 kHz.
Both signals are always 25 pulses per division. The signal TBS is converted into ECL-level and applied via a wired-OR circuit to D1306, which functions as a divide-by-five circuit (output on pin 15). Via ECL/TTL converter D1307, the signal is applied to the 4-stage down counter consisting of D1308, D1309, D1311 and D1312. This system operates as follows:

The preset trigger delay in the DIV display is converted to a particular number by the microprocessor system and this number is set on the data-bus and loaded in the counters in two cycles.
First, D1308 and D1309 are loaded by enabling them (on D1308-1 and D1309-11) with pulse $\overline{\text{IO8}}$ together with address 8086 and the $\overline{\text{WR}}$ pulse. After this, D1311 and D1312 are loaded by enabling them (pins 11) with pulse $\overline{\text{IO8}}$ in combination with address 8085 and $\overline{\text{WR}}$ pulse.
The number now loaded must be counted down. The count pulses are derived from signals TBS or TBF, which may be enabled by $\overline{\text{EDCT}}$ applied via TTL/ECL converter D1303 and flip-flop D1304 to input 7 of D1306.
The pulse $\overline{\text{EDCT}}$ is generated under the following conditions:

- Reset input 1 of D1317 is high.
- TRIST pulse goes high.

In this event, $\overline{\text{EDCT}}$ goes active, so set input 5 of D1304 goes low, and on receipt of a TBS or TBF pulse at clock input 6 of D1304, output 3 goes high and enables D1306 as a five-counter.
After counting down to zero, output 13 of D1312 goes low and via AND-gate D1316 (8, 9, 10) the reset input 1 of D1317 goes low and output 6, the $\overline{\text{EDCT}}$ pulse, goes high to disable D1306.

Divider D1306 must be blocked during the new loading of the down counter. This is achieved by the pulse NTSC which remains low during loading, and D1317 reset 1 remains low.
After loading, D1317 reset 1 goes high and on receipt of a TRIST pulse, signal $\overline{\text{EDCT}}$ reverts to the active state.
If the counter is blocked, the signal DELTRG goes high via D1323 and D1316 (4, 5, 6).

6.2.13.4. Digital-to-analog converter for trigger delay in Sampling mode

In the sampling mode, an analog signal is required to delay the trigger. This signal is derived from the digital-to-analog converter D1327, which is loaded with the information of the data-bus when enabled by pulse $\overline{\text{WR}}$ in combination with $\overline{\text{TO8}}$ and address 8086.
The digital information is coded by the software and is converted into an analog voltage. This is a d.c. voltage for the time during which no change is made in the delay setting. The total delay possible in the sampling mode is 100 divisions. These 100 divisions are digitally divided into 200 steps; that is, each division delay is digitally two steps. On conversion, it is then 80 mV/division.
The function of the trigger delay is explained in the description of the trigger unit A22.

Note: Bear in mind that the principle of the oscilloscope with a trigger delay of zero means that the DELTRIG pulse always appears 10 divisions after the TRIST pulse.

INCOMING SIGNAL	OUTGOING SIGNAL	GENERATED ON UNIT	USED ON UNIT	DESCRIPTION
A0 - A1 - A2		A4		Address bits from system address bus
AUTO TB		A22		Auto signal from AUTO switch
	$\overline{\text{AUTRI}}$	A13	A9	Auto trigger
	AVSB	A13	A4-6-20	logic "0" in X= A/Y= B mode
$\overline{\text{CTF}}$		A9		Clear signal for trigger flip-flop
DØ . . . D7		A4		Data bits from system data bus
	DACDEL	A13	A22	Output signal of DAC delay
	DELTRG	A13	A9-A202	Delayed trigger signal
	DJ	A13	A20	Dot join signal
DT		A4		Display timing
	ENKEL	A13	A20	Single channel mode
	FAS DI	A13	A6	Phase on display level
	FRUN	A13	A22-A202	Freerun signal
$\overline{\text{IO8}}$		A4		I/O address decoding signal
	PEN LFT	A13	OUTPUT	Penlift
	QØ - Q1	A13	A20	Control signals for dot join
	RESDJ	A13	A20	Reset dot join
TBF		A12		Time-base fast
TBS		A12		Time-base slow
TRIST		A22		Trigger signal for strecher
	TRSH	A13	A20	Trigger for dot join sample & hold
$\overline{\text{WR}}$		A4		Signal WRITE from microprocessor
X OUT		A20		Horizontal output signal
	X PLOT	A13	OUTPUT	Horizontal plot output signal
	Y EX	A13	A20	Y-expand
Y OUT		A20		Vertical output signal
	Y PLOT	A13	OUTPUT	Vertical plot output signal
	ZDJ	A13	A4-A20	Z dot join
1.25 MHz		A12		
2.5 MHz		A4		
+5V		A15		
−5.2V		A15		
+12V		A15		
−12V		A15		
⏚		A15		

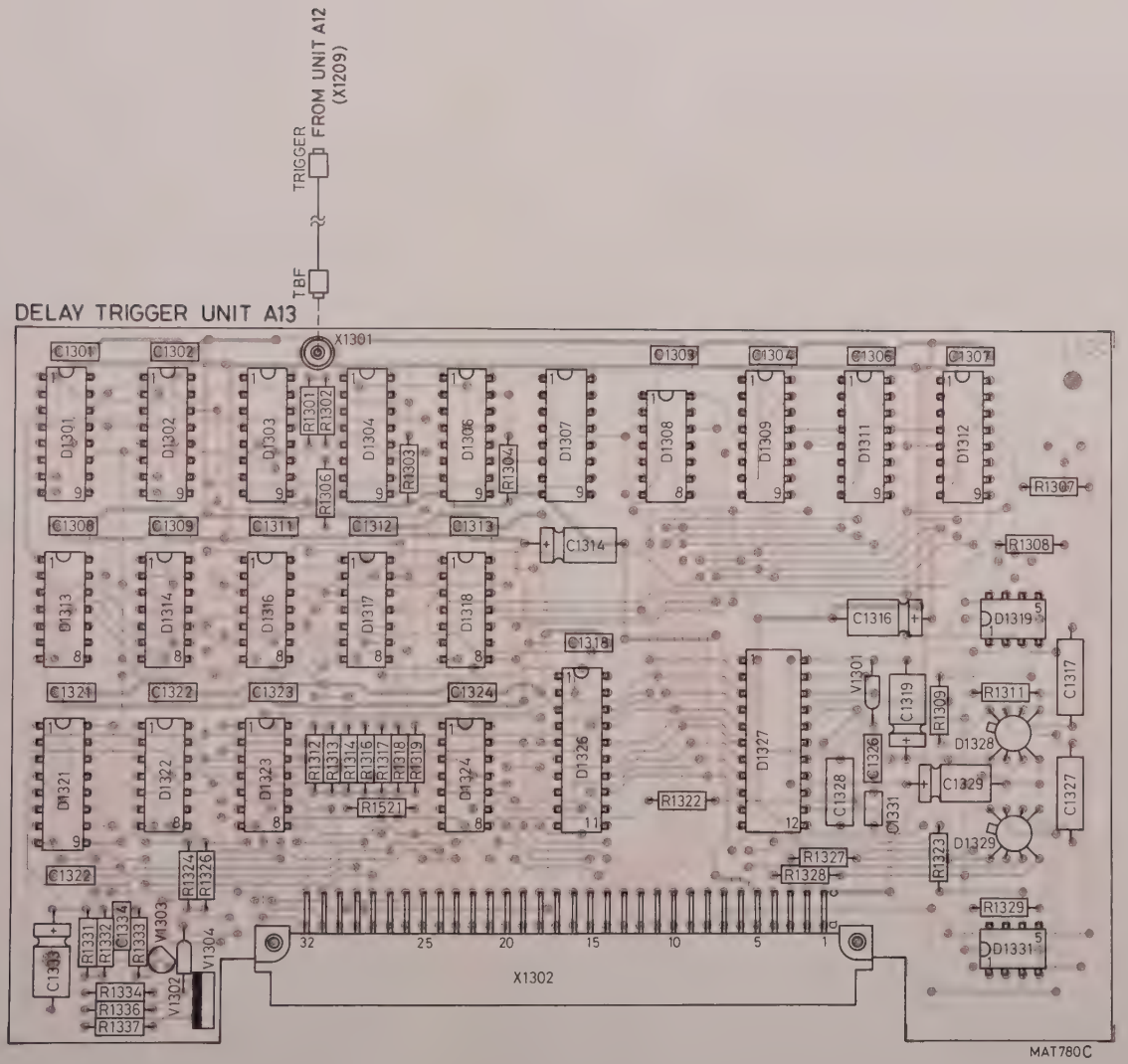
TRIGGER
FROM UNIT A12
(X1209)
TBF
DELAY TRIGGER UNIT A13
X1301
X1302
MAT780C

Fig. 6.2.58.

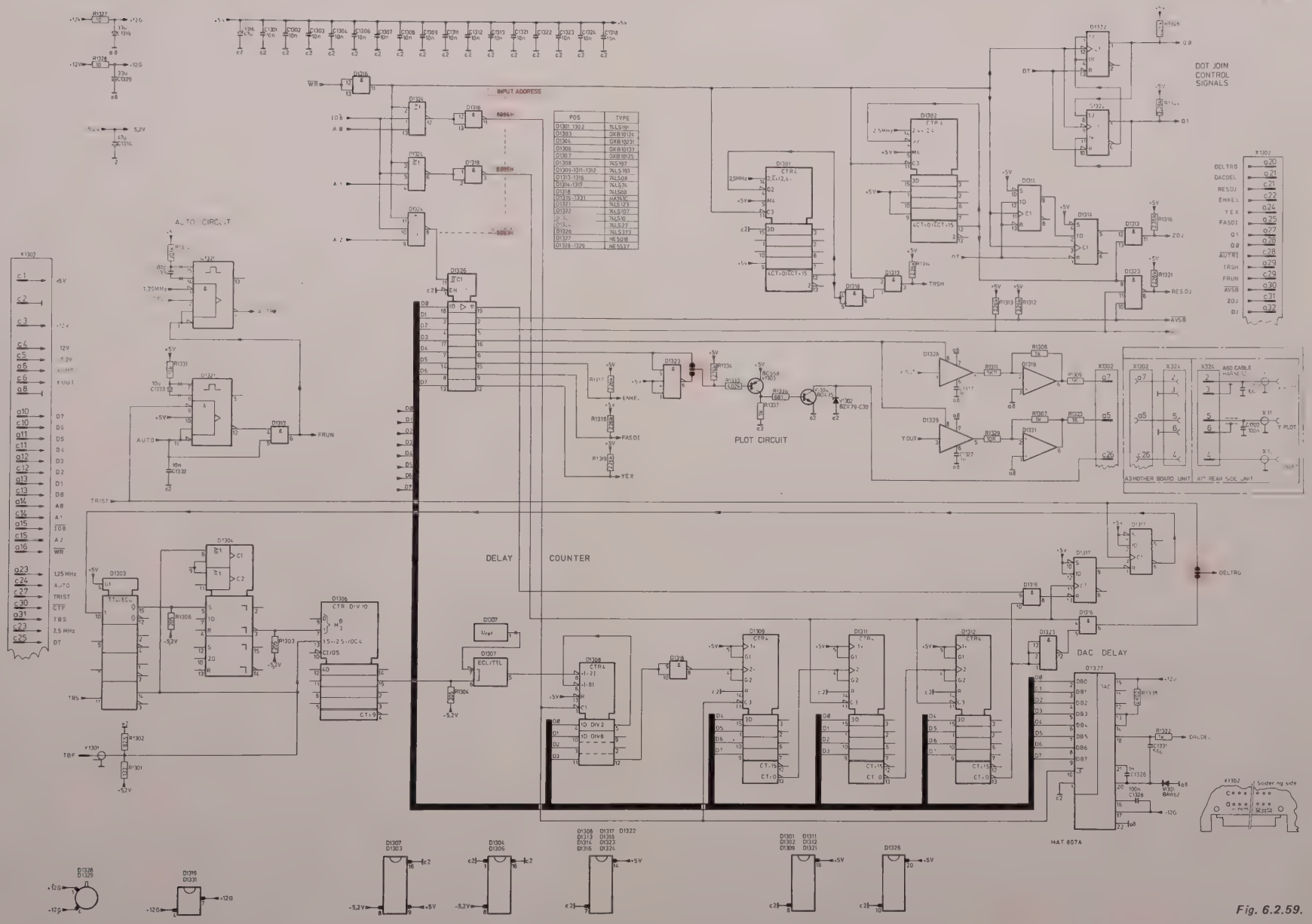

POS	TYPE
D1301 1302	74LS191
D1303	GXB10124
D1304	GXB10231
D1305	GXB10123
D1307	GXB10125
D1308	74LS197
D1309-1311-1312	74LS193
D1313-1316	74LS08
D1314-1317	74LS74
D1318	74LS00
D1319-1331	GAL16V8C
D1321	74LS123
D1327	74LS107
D1322	74LS10
D1324	74LS377
D1326	74LS273
D1327	HE5018
D1328-1329	HE5537

Fig. 6.2.59.

6.2.14. I.E.C. unit A14

There is a connector X1401 available on the motherboard unit A3 in which no plug-in unit is placed.

Here the I.E.C. bus interface option PM 3325 can be placed.

For mounting instructions refer to the sheet which is delivered with the PM3325.

– PM3311C instruments are already provided with an I.E.C. unit A14.
– For service spare parts refer to chapter 12 "PARTS LISTS".

6.2.14.1 General description (refer to block diagram).

An IEC bus line interface is used in multidevice systems to connect the instruments in parallel to the same interface lines. Each instrument has its own specific address (selected with switches in the instrument) so that an instrument is only listening after it has received its specific address, in IEC terms is called **My listen Address (MLA).** The Listen addresses are generated by the controller of the system (e.g. a computer) and are transmitted via the data lines of the bus during an address or interface message the attention line (ATN) is active to indicate that the information on the data lines have a special interface function.
The IEC bus can be split up into three functional parts: the data bus, the handshake bus and the management bus.

– **The Data Bus** is used to transport messages for the device functions as well as for the interface functions and consists of 8 lines **(D101...8).**
– **The Handshake Bus** controls the correct transfer of data bytes with the next three signals.

Data Valid (DAV) indicated the condition of information on the 8 DIO lines.
Not ready for data (NRFD) indicates the condition of readiness of device (s) to accept data.
Not data accepted (NDAC) indicates the condition of acceptance of data by devices.
A timing diagram for the handshake cycle is shown in the figure,take notice that the cycle is as fast as the slowest instrument.

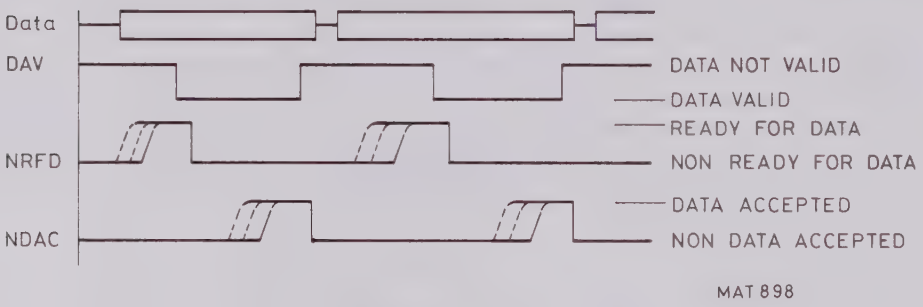

– **The management bus** is used to manage an orderly flow of information **accross** the interface.

Herefore the next five signals are available:
Attention (ATN) specifies how data on the DIO lines are to be interpreted. Active indicates a message is transferred via the data bus (for example a listen address), not active status is present during normal data transfer (for example a command for the oscilloscope).
Interface clear (IFC) places the interface of all interconnected devices in a known quiescent state.
Service Request (SRQ) indicates that one of the instruments wants the attention of the controler for example to give an error message.
Remote enable (REN) sets an instrument to its remote-control mode, if it is in the addressed state.
End of identify (EOI) indicates the end of a multiple byte transfer.

NOTE: Because of the negative logic used for the IEC-bus the signals are "true" (active) when they have a low level, HOWEVER all signals at the lefthand of the buffers D1406-07-16-17 are given for positive logic, so "true" is a high level.

How does the interface function?

Initiation:

When the oscilloscope is switched-on, the C.P.U. reads the card code to identify which of the optional interfaces has been fitted. In this case it is the PM3325 so the C.P.U. starts with the initiation of the interface by sending control-signals to the latch D1424. The integrated circuit D1408 (HEF 4738) reads the status of the switches for MLA/MTA, TALK ONLY and LISTEN ONLY and some control signals via the two shift registers D1429 and D1431. The listen address is put into a register of D1408.
Now the interface is ready to operate.

Receiving:

First the system-controller sends a listener address via the DIO lines (so ATN is "true"). If the address is equal to the MLA in the HEF4738, the interface becomes the listener status, this action is performed without intervention of the C.P.U. of the oscilloscope. Once in the listener state all succeeding data (without ATN="true") is read by the C.P.U. of the oscilloscope in the following way: The C P U sets via the control signals latch the signal READY FOR NEXT MESSAGE to the active (low) state.
After the falling edge of the RDY signal the HEF 4738 starts with the bus handshake. First Not Ready For Data (NRFD) on connector X1402-pt8 is made high by the PM3325, so the interface is ready to receive data (for remember the IEC-bus uses negative logic). Then the controller puts data on the DIO lines and makes Data Valid (DAV) on connector X1402-pt7 "true" (=low). DAV is received by the HEF 4738 and as a result Data Valid Device (DVD) on pin 17 becomes "true" (=high). When DVD becomes high the data is latched into D1426. DVD is also supplied to the interrupt logic, so the C.P.U. of the oscilloscope interrupts its current program and checks the interrupt status D1423. DVD on pin 2 of D1423 is high, consequently the oscilloscope sets listen enable high, to inhibit interrupts caused by DVD and reads the contents of the input latch D1426. Subsequently the C.P.U. sets the signal ready for next message high and reads DVD, when DVD becomes low the C.P.U. resets the signals ready for next message and listen enable. The latter enables the DVD signal again to interrupt the oscilloscope.

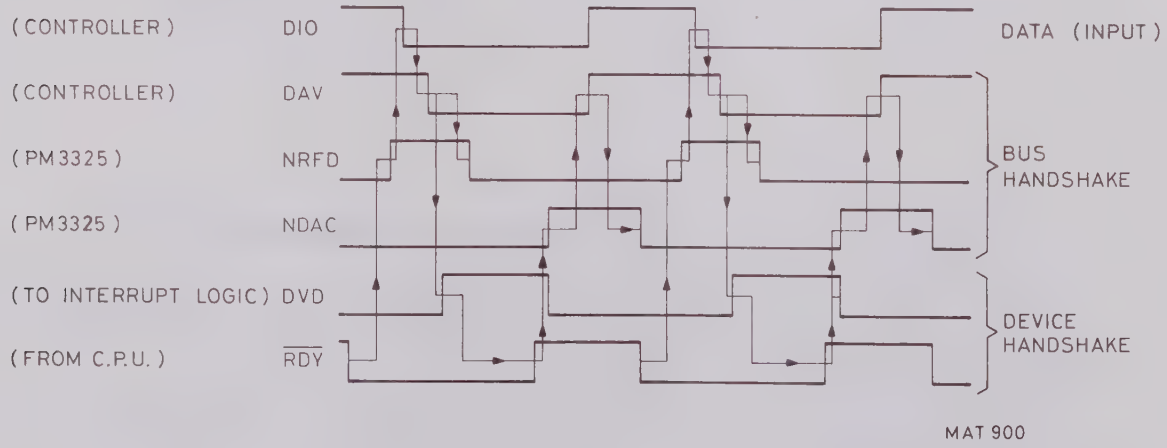

MAT 900

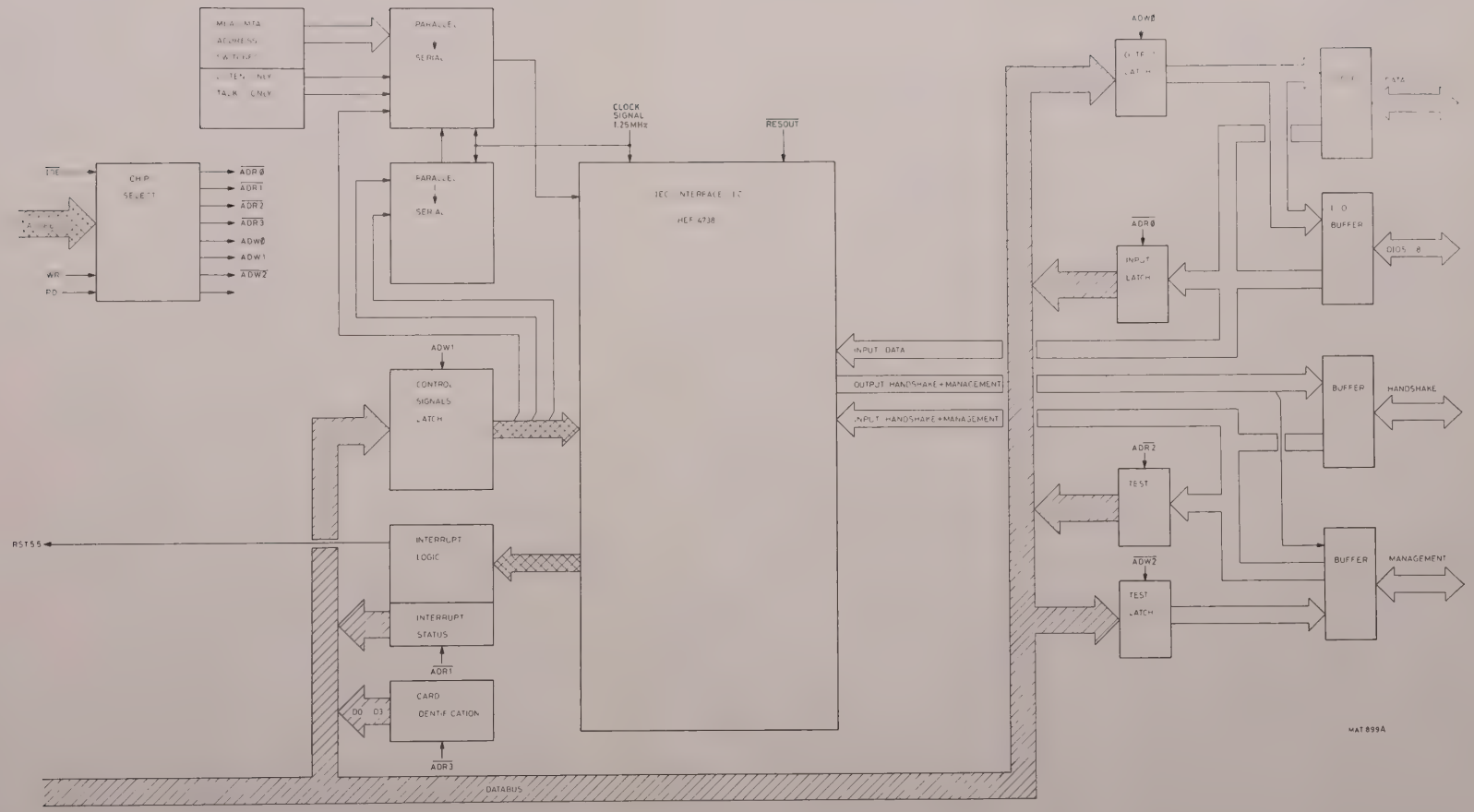
PARALLEL
SERIAL
CLOCK
SIGNAL
1.25MHz
RESOUT
CHIP
SELECT
ADR0
ADR1
ADR2
ADR3
ADW0
ADW1
ADW2
WR
RD
IEC INTERFACE I.C
HEF 4738
INPUT DATA
OUTPUT HANDSHAKE+MANAGEMENT
INPUT HANDSHAKE+MANAGEMENT
CONTROL
SIGNALS
LATCH
INTERRUPT
LOGIC
INTERRUPT
STATUS
CARD
IDENTIFICATION
D0 D3
RST55
DATABUS
INPUT
LATCH
I O
BUFFER
BUFFER
HANDSHAKE
TEST
TEST
LATCH
BUFFER
MANAGEMENT
MAT 899A

Transmitting:

The PM3310 in combination with th PM3325 is capable to send status messages to a controller in case of an error condition. If the oscilloscope has such a message, it asks the attention of the controller by means of the Service Request (SRQ) line on connector X1402-pt11. The SRQ line becomes active after the C.P.U. has set the request for service bit of the control-signals latch D1424. All the connected instruments use the same SRQ line so the controller must check which of the instruments has caused the service request. This is called SERIAL POLLING therefore the controller must address the instruments one by one as talker and read the status-byte: The seventh bit of the status-byte indicates that the corresponding instrument has asked for service, the other bits give the status condition of the instrument.
The status word is built-up as follows:

bit 8	Not used
bit 7... "1"	A SRQ has been given by the PM3311
"0"	No SRQ is given
bit 6 ..."1"	An ALARM is given to indicate that there is a fault condition.
"0"	No ALARM is given
bit 5 ..."1"	The PM3311 is busy with the programmed action
"0"	The PM3311 is ready with the programmed action
bit 4 ..."1"	Data on bus valid } not used for PM3311
'0"	Data on bus not valid } not used for PM3311
bit 3 bit 2 bit 1	Not used

The sequence of signals during an error condition is as follows.
First the C.P.U. activates the request for service signal of integrated circuit D1424 pin 6. The result is an active SRQ signal on connector X1402-pt11. The controller sends talk addresses, once become talker the C.P.U. puts the status-byte in the output latch and activates the signal new byte available (D1424 pin 19). Subsequently the PM3325 waits till NRFD (X1402-pt8) becomes high and then DAV (X1402-pt7) is made active (= low) and NRFD is reset by the controller.
When the controller has received the data, it makes the signal NDAC (X1402-pt9) high, the PM3325 answers with setting the DAV high and then the controller resets the NDAC signal.

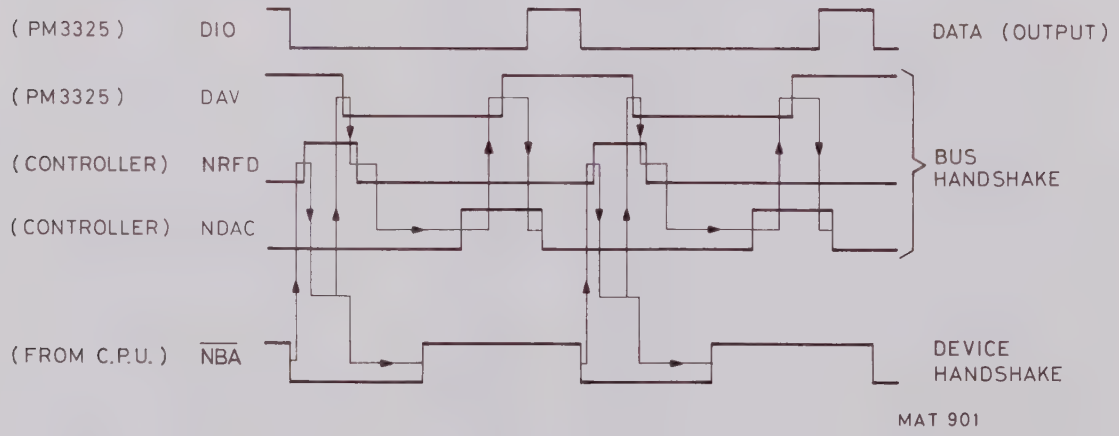

6.2.14.2 Chip select

To select chips of the IEC interface board the inputs of the chip select circuit must have the logic levels as given in the next table.

INPUTS					ADDRESS - BUS	OUTPUT	SELECTED FUNCTION	
$\overline{IOE}$	A1	A0	$\overline{RD}$	$\overline{WR}$	HEX. - CODE			
0	0	0	1	0	80E0(H)	ADWØ	Output latch	D1427
0	0	1	1	0	80E1(H)	ADW1	Control signals latch	D1424
0	1	0	1	0	80E2(H)	$\overline{ADW2}$	Test latch	D1413
0	0	0	0	1	80E0(H)	$\overline{ADR0}$	Input latch	D1426
0	0	1	0	1	80E1(H)	$\overline{ADR1}$	Interrupt status	D1423
0	1	0	0	1	80E2(H)	$\overline{ADR2}$	Test latch	D1428
0	1	1	0	1	80E3(H)	$\overline{ADR3}$	Card identification	D1428

6.2.14.3. Card identification

After a reset of the PM3310 or after switching-on the power, the C.P.U. of the oscilloscope checks if an optional interface has been fitted into connector X1402 (of the PM3311). This is performed by putting the hexadecimal code 80E3 on the address bus and reading the card code (0010 is the code of the PM3325) via the data bus.

"0" if an optional interface has been fitted.

6.2.14.4 MLA/MTA address, listen only and talk only.

With switches S1401-2-3-4-5 the listen address as well as the talk address is selected.
S1401 is the least significant bit and S1405 the most significant bit.
Do not use de code 00000 or 11111, the first is generally used as the address of the system controller the latter is the code for the commands "unlisten" and "untalk".
The MLA/MTA code is converted to a serial pattern with integrated circuit D1431 and is shifted into a register of D1408.
"Talk only" is not used if the PM3325 is used in combination with the oscilloscope "Listen only" can be used if another instrument connected to the oscilloscope is not capable to generate addresses, then that instrument must be switched to its "talk only" position.

6.2.14.5 Control-signals latch

Via integrated circuit D1424 the C.P.U. of the oscilloscope can control functions of the IEC-bus interface such as request for service, and the handshake between the interface board and the oscilloscope. The next table gives the signals with a description of the function.

SIGNAL	DESCRIPTION
READY FOR NEXT MESSAGE	Indicates the readyness of the C.P.U. to receive the next character.
LISTEN	"0" indicates that the HEF4738 (D1408) may be addressed as talker as well as listener at the same time. "1" causes an unaddressing of the listener function, when a talk address is given and an unaddressing of the talker function, when a listen address is given.
REQUEST FOR SERVICE	The oscilloscope wants the attention of the system controller.
RETURN TO LOCAL	Not used in PM3310.
TEST ENABLE	Not used in PM3310.
END OR IDENTIFY	Not used in PM3310.
LISTEN ENABLE	Signal to enable (if low) or inhibit an interrupt caused by "DATA VALID DEVICE" via D1403 pin 4.
NEW BYTE AVAILABLE	An active low signal indicates that the oscilloscope has data to be transmitted.

6.2.14.6 Interrupt logic, interrupt status.

The output signal RST 5,5 of the interrupt logic (D1419 pin 4) gives an interrupt to the microprocessor of the instrument, when the input of flip flop D1419 becomes low. Four signals can cause an interrupt in this way, namely DATA VALID DEVICE, DEVICE CLEAR, LOCAL and TALKER ACTIVE STATE. Flip flop D1419 is reset by the positive going edge of signal $\overline{ADR1}$ with the circuit consisting of R1402, C1421, D1411, D1412 and D1422. $\overline{ADR1}$ is generated by the chip select circuit when the interrupt status is read.
By reading the interrupt status the C.P.U. of the oscilloscope can check the status of the interface board after an interrupt has been received. The next table gives a survey of the statussignals with a description.

SIGNAL	DESCRIPTION
DATA VALID DEVICE	"1" indicates the IEC-bus interface has received data for the oscilloscope.
DEVICE CLEAR	"1" after the system controller has transmitted the command "device clear" or "selected device clear"
TRIGGER	"1" after the system controller has transmitted the command "device clear"
LOCAL	"1" after the system controller has transmitted the command "device clear"
SERIAL POLL	"1" after the system controller has transmitted the command "serial poll enable". The signal is reset by the command "serial poll disable".
TALKER	"1" indicates that the interface board is in the talker active state
END OR IDENTIFY	"1" after the system controller has transmitted an active EOI.
HANDSHAKE	Becomes "1" when the signal DAV (source transfer state) becomes true. It is reset by the signal $\overline{\text{new byte available}}$.

6.2.14.7 Clock signal, $\overline{\text{RESOUT}}$ signal.

The clock pulse of 1,25 MHz from the PM3310 is used for the internal synchronisation of the HEF4738 (D1408) and for the two 8 bit shift registers (D1431 and D1429).

MAT 902

The $\overline{\text{RESOUT}}$ signal is used to reset the HEF4738 to initial values and to reset the flip-flop's of integrated circuit D. The figure shows the signals when the instrument is switched on.

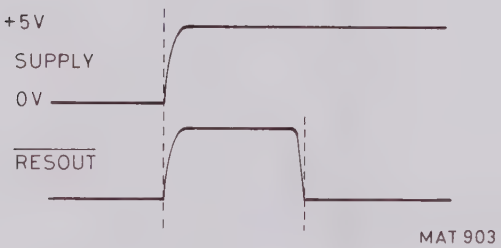

MAT 903

6.2.14.8 Output latch, input latch.

The output data, coming from the C.P.U. of the oscilloscope, are latched into the D-flip flops of the output latch when the signal ADW2 becomes high. The 8-bit output of the latch is continuously connected to the nand-gates in the I/O buffers D1416 and D1417 because the $\overline{\text{enable}}$ input (pin 1 of D1427) has been connected to ground.
The input data, coming from the I/O buffers D1416 and D1417, are latched into the eight D-flip flops of D1426 when the signal "Data Valid Device" (DVD) becomes high. The output of the D-flip flops is connected to the date bus when signal $\overline{\text{ADR0}}$ becomes low, at that moment the input data is read by the C.P.U. of the oscilloscope.

6.2.14.9 I/O buffers.

As buffers for the eight DIO lines D1416 and D1417 are used. They consist of inverters, nand gates and resistors. The input data is fed to the input latch and to the HEF4738 (D1408) via the inverters. Output data, coming from the output latch is fed to the nand-gates. The output data is put on the DIO lines when the signal "TALKER ACTIVE STATE" is high. The two remaining buffers (D1406 and D1407) are used for the handshake signals and management signals. Here the enable signals for the nand-gates have been connected to ground so the outputs are always enabled.

INCOMING SIGNAL	OUTGOING SIGNAL	GENERATED ON UNIT	USED ON UNIT	DESCRIPTION
A0 ... A1		A4		Address bits from system address bus
	ATN	A14		Attention
D0 ... D7	D0 ...D7	A14	A4	Data bits from system data bus
	DAV	A14		Data available
	D101 ... D108	A14		Data input/output bits
	EOI	A14		End or identify
$\overline{IOE}$		A4		I/O address decoding signal
	NDAC	A14		Not data accepted
	NRFD	A14		Not ready for data
	IFC	A14		Interface clear
$\overline{RD}$		A4		Signal READ from microprocessor
	REN	A14		Remote enable
RESOUT		A4		Microprocessor RESET OUTPUT signal
	RST 5,5	A14	A4	Restart 5,5 signal to microprocessor
	SRQ	A14		Service request
$\overline{WR}$		A4		Signal WRITE from microprocessor
1,25MHz		A12		
+5V		A15		
⏚	⏚	A15		

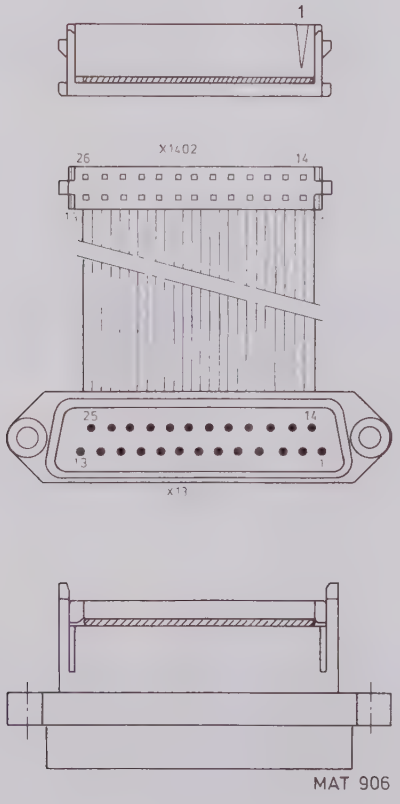

MAT 906

I.E.C. BUS INTERFACE UNIT A14

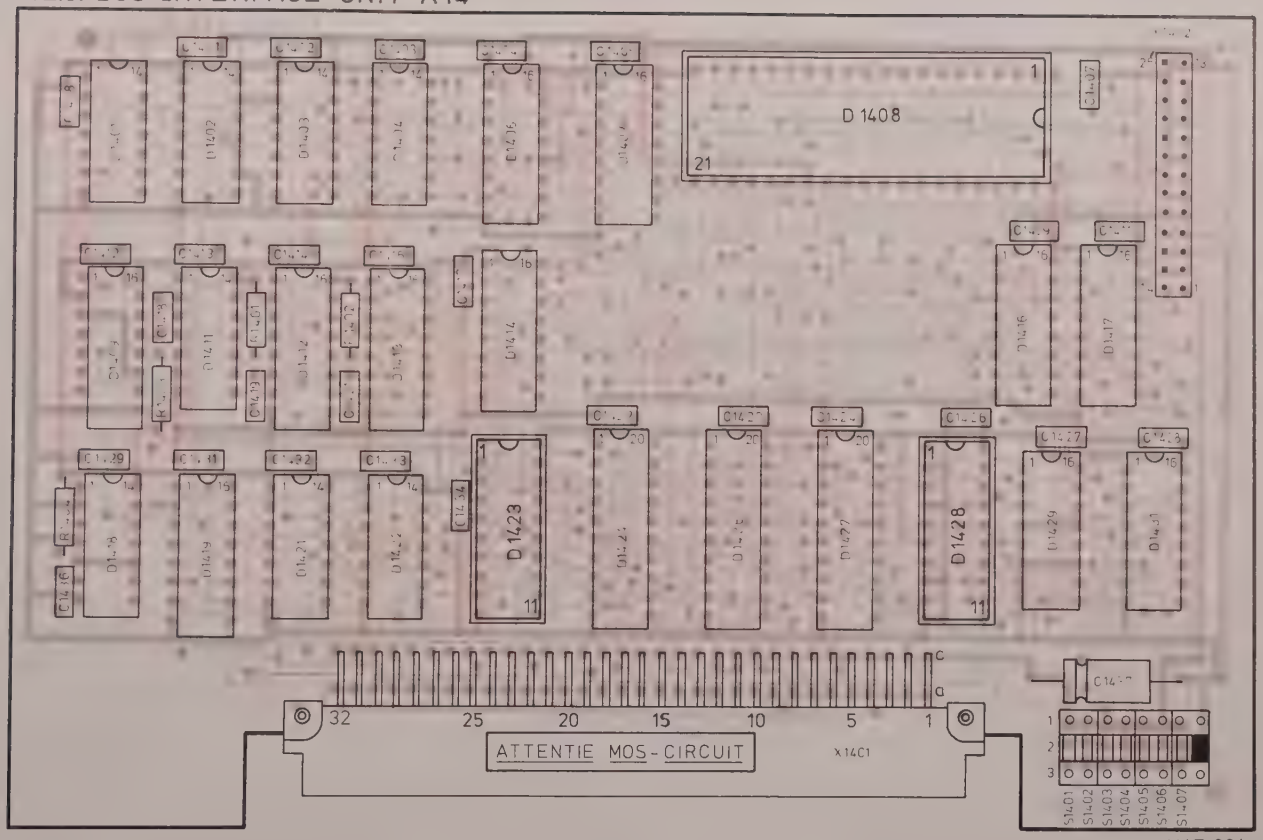

MAT 904

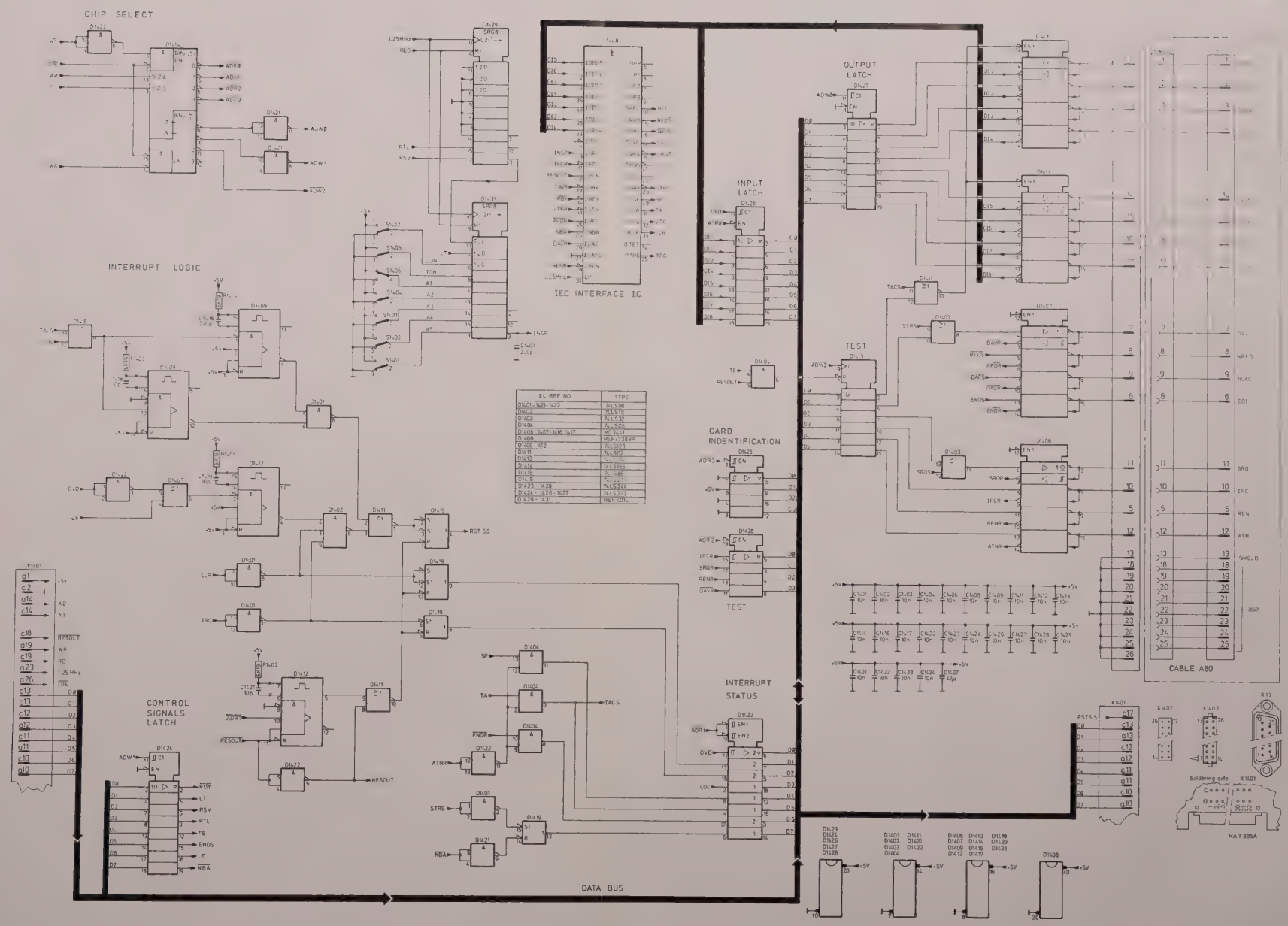

EL REF NO	TYPE
D1401 - 1421 - 1422	74LS00
D1402	74LS10
D1403	74LS32
D1404	74LS08
D1406 - 1407 - 1416 - 1417	MC3441
D1408	HEF4738VP
D1409 - 1412	74LS123
D1411	74LS02
D1413	74LS02
D1414	74LS155
D1418	74LS86
D1419	74LS153
D1423 - 1428	74LS244
D1424 - 1426 - 1427	74LS373
D1429 - 1431	HEF4014

6.2.15. DC power unit A15

The DC power unit A15 contains the following circuits:

- DC output circuits
- High voltage converter and EHT unit
- Memory back-up circuit
- Protection circuit for the +5 V
- Cathode-ray tube circuit
- Z-amplifier circuit
- Illumination circuit
- Line signal circuit

Each of these circuits is now separately described.

DC output circuits

The voltages on the secondary windings of transformer T1602 on the AC power unit A16 are applied to several rectifiers and voltage doublers.

The bridge rectifiers provide for the +5 V, −5 V, +6 V, −6 V, +12 V, −12 V and +40 V supply voltages. The voltage doublers provide for the +125 V and −125 V supplies.

A −5 A supply voltage is derived from the −12 A via D1501.
A +6,5 V supply is derived from the +12 A by R1561, C1547 and V1544.
A +94 V supply is derived from the +125 V via R1572, C1548 and zener diodes V1554, V1556.

The secondary windings providing the voltages for the various circuits in the oscilloscope are completely isolated from the mains power supply.
Each supply voltage is individually rectified and smoothed.

The filament of the c.r.t. is supplied by the 6.3 V heater voltage between f_1 and f_2.

High-voltage converter and EHT unit

A sine-wave converter formed by transformer T1501 and V1501 converts the +40 V d.c. into 1500 V a.c. with a frequency of approximately 30 kHz.
This voltage is applied to a voltage multiplier on EHT unit A23. The output voltage of this multiplier, 6.5 kV, is applied to g8 of the c.r.t.

Furthermore, the converter output of 1500 V is also rectified and smoothed by V1502, C1502, R1514 and C1503 and applied to the c.r.t. cathode. It is also fed back to the positive input of operational amplifier D1503 to stabilise the cathode voltage of the c.r.t. and thus prevent any variations in c.r.t. sensitivity.

A reference voltage, obtained from divider R1578, R1591 and R1577 is applied to the negative input pin 2 of operational amplifier D1503.
The resulting voltage on pin 6 of D1503 now controls the high-voltage converter via R1526.

Memory back-up circuit

Two 1.5 V batteries can be fitted in the instrument for memory back-up.

When this battery back-up facility is used, the information that was stored in the random-access memories (RAMs) before switch-off (i.e. signal information and switch settings) is saved when the POWER switch is OFF.

The RAM memories are normally supplied by the voltage +5 BATT, which is derived from the +5 V via transistor V1549 when the instrument is switched on. In this case, the batteries are protected by diode V1546. When the POWER switch is OFF, the supply for the RAM memories is obtained from the batteries via V1546.

Protection circuit for the +5 V

This circuit protects the TTL circuits in the instrument from damage caused by an excessively high +5 V supply. When, for some reason, the +5 V supply increases to a value above 6 V approx., this +5 V supply is switched off by thyristor V1551 under the control of SCS V1527.

Cathode-ray tube circuit

In addition to the c.r.t., this circuit includes the intensity, focus, astigmatism, trace rotation and geometry controls.

C.r.t. controls

By means of the front-panel INTENS potentiometer R15, the intensity of the display can be continuously controlled.
Focussing of the trace is only possible by means of the internal FOCUS potentiometer R1506 (coarse control) and R1588 (fine control).

Trace rotation is achieved by the trace rotation coil circuit. The coil is mounted inside a mu-metal screen and provides a magnetic field for rotational control of the entire scan. The degree and direction of rotation is determined by the setting of the TRACE ROTATION front-panel preset R16 (screwdriver-operated).
The slider of R16 is connected to the bases of complementary emitter-followers V1558, V1559. The trace rotation coil current is supplied by these transistors, only one conducting at a time depending on the setting of R16.

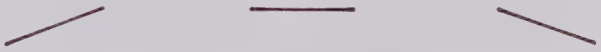

OPTIMUM ADJUSTMENT

The ASTIGMATISM control R1587 enables the form of the spot to be adjusted by influencing the voltage on c.r.t. grids G2/G4.

Barrel and pin-cushion distortion are automatically minimised by the signal X-Y GEM connected to G5, G6 and G7. In this way, these screening grids are connected to a potential equivalent to the mean voltage of the deflection plates. The signal X-Y GEM is generated in the final amplifier unit A20.

Z-amplifier circuit

a. Intensity control

The output voltage of amplifier D1502 can be varied by INTENS potentiometer R15, to give variable illumination of the c.r.t. trace.

The Z-amplifier receives an input signal ZIN which originates in the microprocessor unit A4.
When necessary, the trace is blanked by this signal ZIN, which is the final outcome of a number of different blanking situations occurring in this instrument. Signal ZIN is amplified by the stage incorporating transistors V1547 and V1553. Transistor V1553 acts as a constant-current source. At the output of this amplifier the a.c. and d.c. components of the blanking signal are routed along different paths.
The a.c. path is via blocking capacitor C1518 directly to the Wehnelt cylinder of the c.r.t. The d.c. component of the signal is fed to the emitters of V1541 and V1537 via a low-pass T-filter, R1571, C1555 and R1569.

The signal is modulated by a frequency of 156 kHz applied to V1541 via diode V1552. The resulting a.c. voltage on the collector of V1537 has a peak-to-peak value that depends on the output voltage of the low-pass filter.

The a.c. collector voltage of V1537 is applied via a symmetrical emitter-follower V1526, V1533 to a peak detector. This peak detector (C1522, V1517, V1516, R1518 and C1516) rectifies the a.c. voltage. Finally, this rectified voltage is added to the cathode voltage and applied to the Wehnelt cylinder G1.

The signal is split into its a.c. and d.c. components in order to isolate the cathode and Wehnelt cylinder, which stand at −1500 V, from the other circuits.

Adjustment of the black level is achieved by potentiometer R1589 in the emitter circuit of V1537 in the d.c. amplifier.

b. Focussing control

The electron beam is focussed using internal focus potentiometer R1588, which controls the emitter voltage of transistors V1539 and V1536. The signal is modulated by a frequency of 156 kHz applied to V1539 via diode V1552. On the collector of V1536 a signal is produced, the amplitude of which depends on the position of potentiometer R1588 (and R15 INTENS).

The a.c. voltage on the collector of V1536 is applied via symmetrical emitter-follower V1524, V1532, to a peak detector. This peak detector (C1521, V1514, V1513, R1516 and C1514) rectifies the a.c. voltage. Finally, this rectified voltage is added to the voltage set by potentiometer R1506 (part of a voltage divider network across the high-voltage converter output) and then applied to the focussing anode g3 of the c.r.t. In this way, the focus voltage also depends on the position of the INTENS potentiometer, which determines the voltage across the divider network R1502, R1506, R1509. This provides a measure of compensation, so that the focus of the electron beam is automatically adapted when the intensity of the trace is varied.

Illumination circuit

The graticule can be illuminated by the indicator lamps E1 and E2. The intensity can be varied by the front-panel ILLUM potentiometer R14, which controls the base, and hence the collector current of transistor V1561, which flows through the lamps. Note that the illumination circuit is not short-circuit proof.

Line signal circuit

The line signal circuit produces a sine-wave voltage for mains triggering that is derived from the input mains voltage.

Photocoupler D1602 on unit A16, which provides isolation between the mains voltage and the oscilloscope circuits, drives the V1564 circuit into saturation, which means that the square-wave voltage appearing on its collector has the same amplitude value for all mains voltages.

The original sine-wave is re-constructed by means of an integrator network R1553, R1551, R1536 and C1546, C1543, C1541.

This signal, LINE, is applied via V1523 and V1531 to the trigger selector.

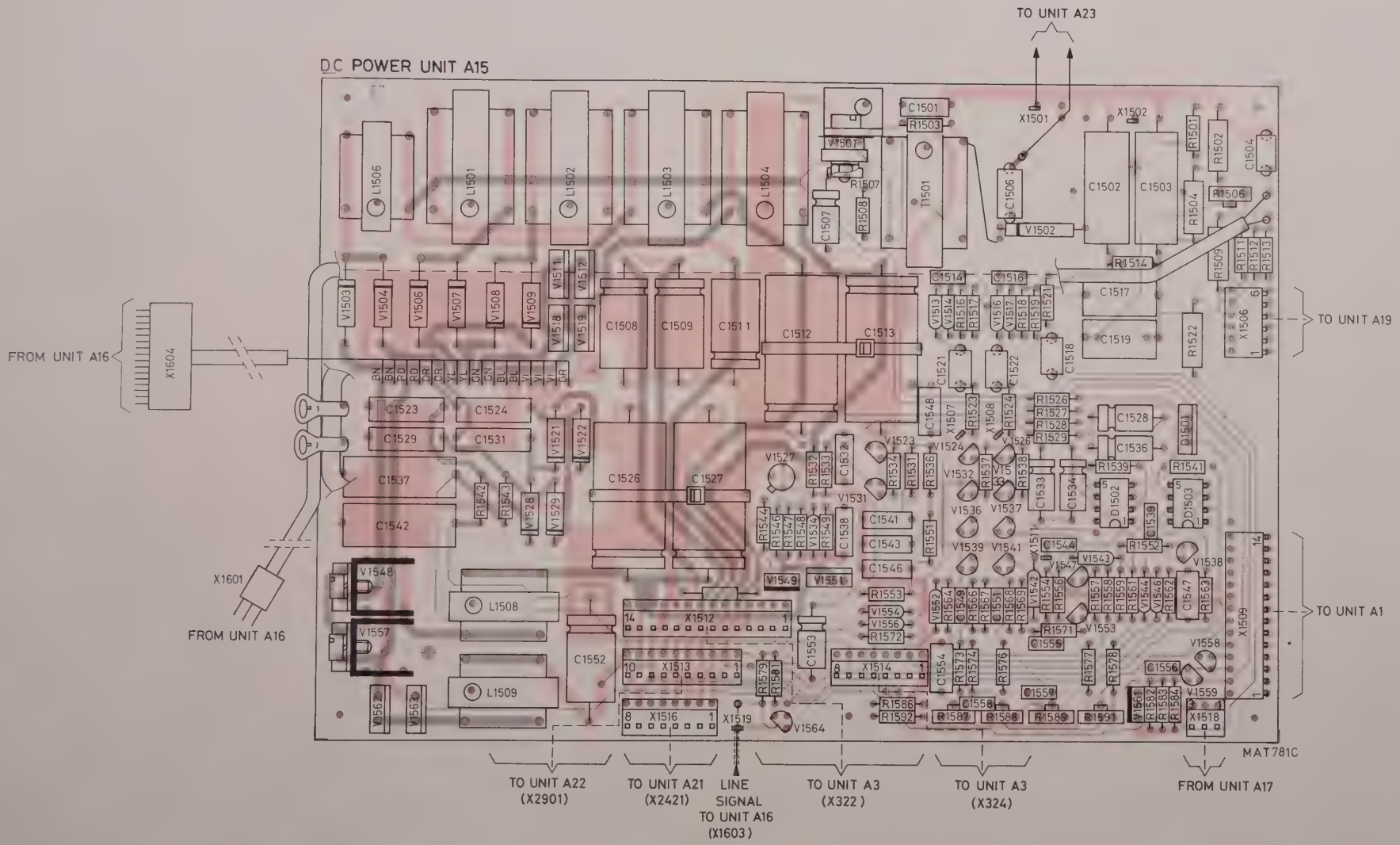
DC POWER UNIT A15
TO UNIT A23
FROM UNIT A16
X1604
X1601
FROM UNIT A16
TO UNIT A19
TO UNIT A1
MAT781C
TO UNIT A22 (X2901)
TO UNIT A21 (X2421)
LINE SIGNAL TO UNIT A16 (X1603)
TO UNIT A3 (X322)
TO UNIT A3 (X324)
FROM UNIT A17

Fig. 6.2.60.

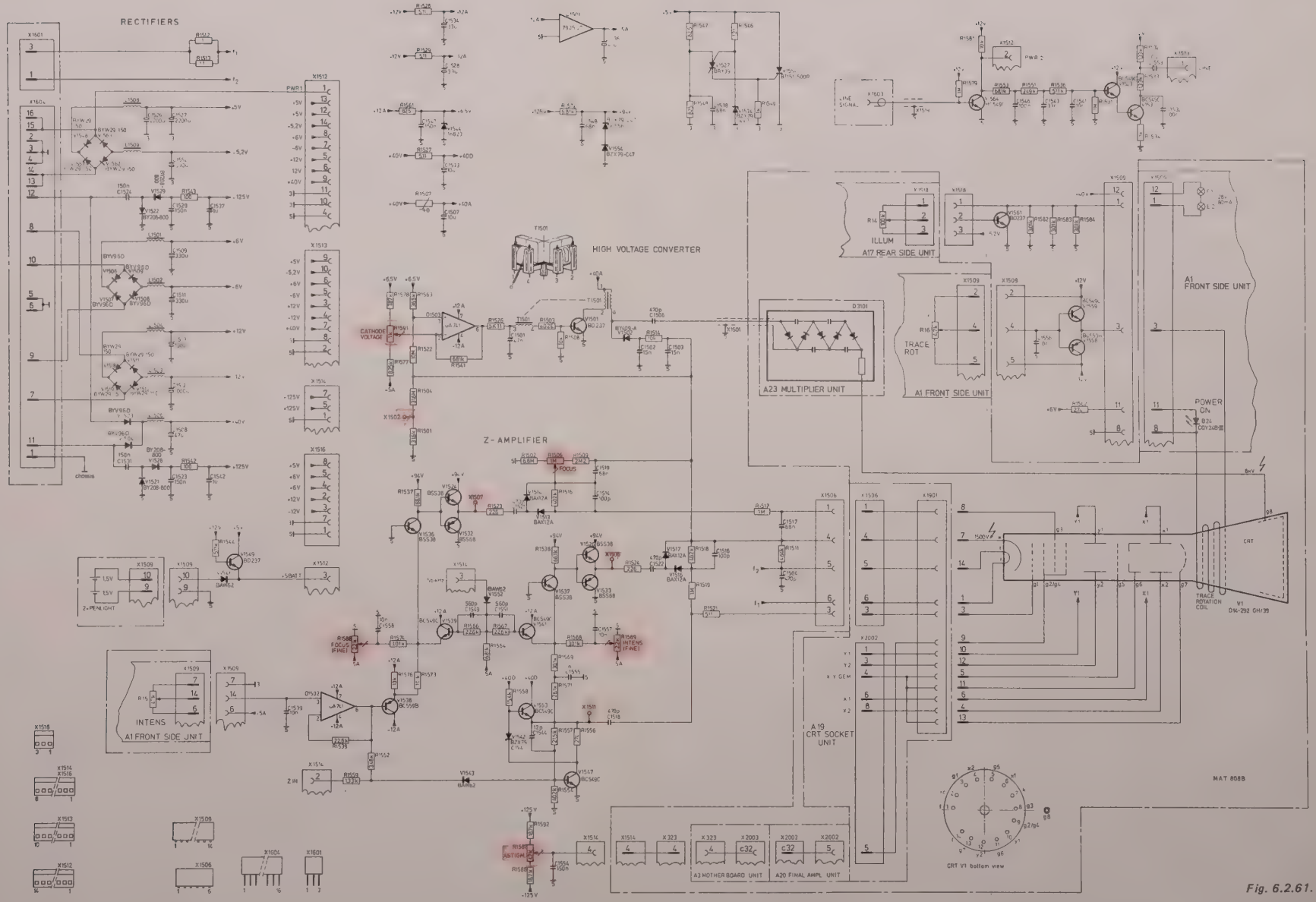
RECTIFIERS
HIGH VOLTAGE CONVERTER
Z-AMPLIFIER
A17 REAR SIDE UNIT
ILLUM
A1 FRONT SIDE UNIT
A23 MULTIPLIER UNIT
TRACE ROT
POWER ON
FOCUS
INTENS
A19 CRT SOCKET UNIT
A3 MOTHER BOARD UNIT
A20 FINAL AMPL UNIT
CRT V1 bottom view
TRACE ROTATION COIL
MAT 868B

Fig. 6.2.61.

6.2.16. A.C. power unit A16

The A.C. POWER UNIT comprises a bridge rectifier, a d.c. to a.c. converter regulator and a transformer. Rectifier circuits for the different supply voltages are located on D.C. POWER UNIT A15.

Input circuit

The incoming mains voltage is fed via a double-pole POWER ON/OFF switch S40, fuse F1701 (2 A delayed-action) and mains filter D1701 to the mains rectifier circuit.

This mains rectifier circuit can be matched to one out of two input voltage ranges (115 V or 230 V range) with the MAINS ADAPTER SWITCH S45 on the rear panel of the instrument.

The two-position switching enables the instrument to operate at any mains voltage between 100V and 120V ± 10 % (115 visible in MAINS ADAPTER SWITCH window) and between 220 V and 240 V ± 10 % (230 V visible in window).

Note: The same 2A delayed-action fuse is applicable for both settings of the mains adaptor switch.

The mains voltage is rectified with the diode bridge V1602 and smoothed by capacitors C1606 and C1604, which form a voltage doubler in the 115 V range of S45 and a standard bridge rectifier circuit in the 230 V range of S45.
The voltage across the series circuit of C1606 and C1604 is 250 V to 400 V for both mains voltage ranges.

Switching circuit

The unregulated d.c. voltage is applied in the form of pulses to a resonant circuit consisting of the primary coil of the converter transformer T1602, combined with C1602 and C1603, via switching transistor V1618.
The sine-wave voltage (approx. 800 $V_{p\text{-}p}$) across the primary coil of T1602 is kept constant by regulating the duty cycle of the base current of V1618.
The primary coil of T1601, which is in series with the switching transistor, limits the current through this transistor.
The energy stored in T1601 is fed back to the mains rectifier circuit, during the cut-off time of V1618, via diode V1601.
Diodes V1608 and V1609 eliminate the dissipation through transistor V1618 during the switching period; instead of this, these losses are dissipated in R1604 and R1603.
Diode V1617 improves the base drive for V1618.

Regulator circuit

The regulator circuit consists of integrated circuit D1601 (type TDA 1060), the output (pin 15) of which supplies a square-wave current with a variable duty-cycle to the base of transistor V1616. The signal on the collector of this transistor is applied to switching transistor V1618 via transformer T1603.
The regulator circuit is controlled by the following:

- Feedback voltage (pin 3)
  This is the regulator control voltage derived from the rectifier circuit in the feedback winding of T1602. The value of this control voltage depends on the setting of R1646.

- Feed-forward voltage (pin 16)
  This voltage is derived from the mains voltage and provides direct compensation for mains variation.

- Overvoltage protection (pin 13)
  A voltage is also derived from the mains voltage, via zener diode V1613, to inhibit the regulator output at excessive mains voltages (the level on pin 13 is 600 mV).

- Current limiting (pin 11)
  The voltage drop across the current-sense resistor R1627 controls the regulator circuit in the event of overload.

– Frequency adjustment (pin 7)
  The value of resistance between pin 7 and earth determines the converter frequency. Preset R1647 should be adjusted for a frequency of 20 kHz approximately, i.e. the resonant frequency of C1602, C1603 and the primary coil of T1602.

During normal working, the power supply for the regulator circuit is provided by the rectifier connected to the feedback winding of T1602. Transistor V1622 then conducts, therefore V1621 does not give any current output.

Switching-on and switch-on protection

At the moment of switching-on the instrument, no supply voltages are immediately available in the regulator circuit from T1602. Transistor V1622 is not yet conducting, therefore transistor V1621 is fully conducting and the regulator derives its current via R1616 and R1631. As soon as the converter circuit is working, transistor V1622 conducts and V1621 blocks.

In the event of the instrument giving no converter voltage at switch-on (due to a possible defect), the PTC resistor R1631 warms up and so reduces the current through transistor V1621 to a safe level.

Output circuits

Various supply voltages are derived from the secondary windings of transformer T1602. These supplies are generated on D.C. POWER UNIT A15.

Photocoupler circuit

To enable triggering on a mains signal, this circuit produces a signal derived from the mains voltage. Photocoupler D1602 provides isolation between the mains voltage and the oscilloscope circuits to produce a safe triggering signal. This output signal is applied to transistor V1564 on unit A15, which is driven into saturation to give a square-wave voltage on its collector. This square-wave has a constant amplitude for all mains voltages.

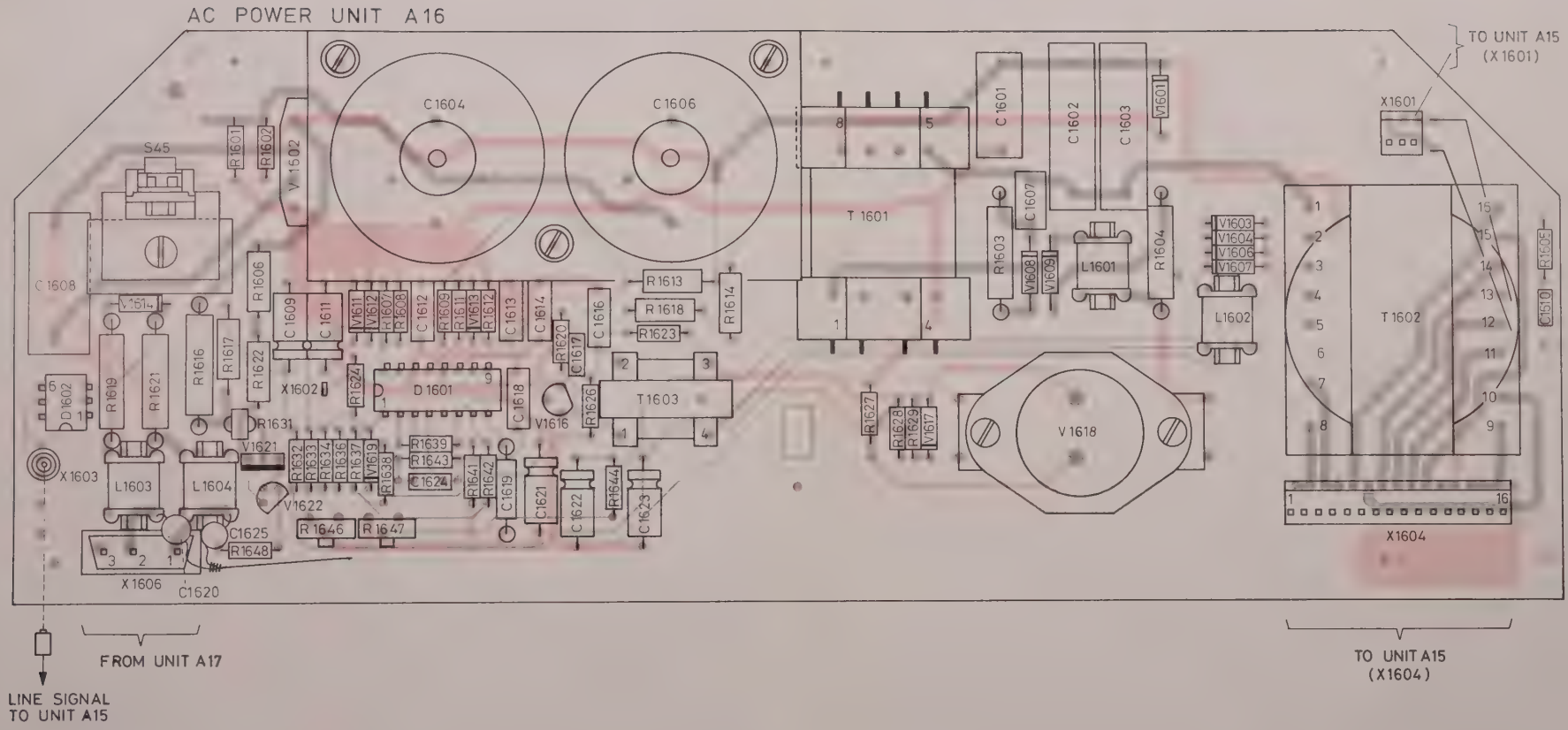
AC POWER UNIT A16
TO UNIT A15
(X1601)
X1601
C1604
C1606
C1601
C1602
C1603
V1601
S45
R1601
R1602
V1502
T 1601
C1608
R1603
C1607
V1608
V1609
L1601
R1604
V1603
V1604
V1606
V1607
L1602
T1602
R1605
C1610
R1606
V1514
C1609
C1611
V1611
V1612
R1607
R1608
C1612
R1609
R1611
V1613
R1612
C1613
C1614
R1620
C1617
C1616
R1613
R1618
R1623
R1614
D1602
R1619
R1621
R1616
R1617
R1622
X1602
R1624
D1601
C1618
V1616
R1626
T1603
R1627
R1628
R1629
V1617
V1618
R1631
V1621
X1603
L1603
L1604
R1632
R1633
R1634
R1636
R1637
V1619
R1638
R1639
R1643
C1624
R1641
R1642
C1619
C1621
C1622
R1644
C1623
V1622
R1646
R1647
C1625
R1648
X1606
C1620
X1604
LINE SIGNAL
TO UNIT A15
FROM UNIT A17
TO UNIT A15
(X1604)

Fig. 6.2.62.

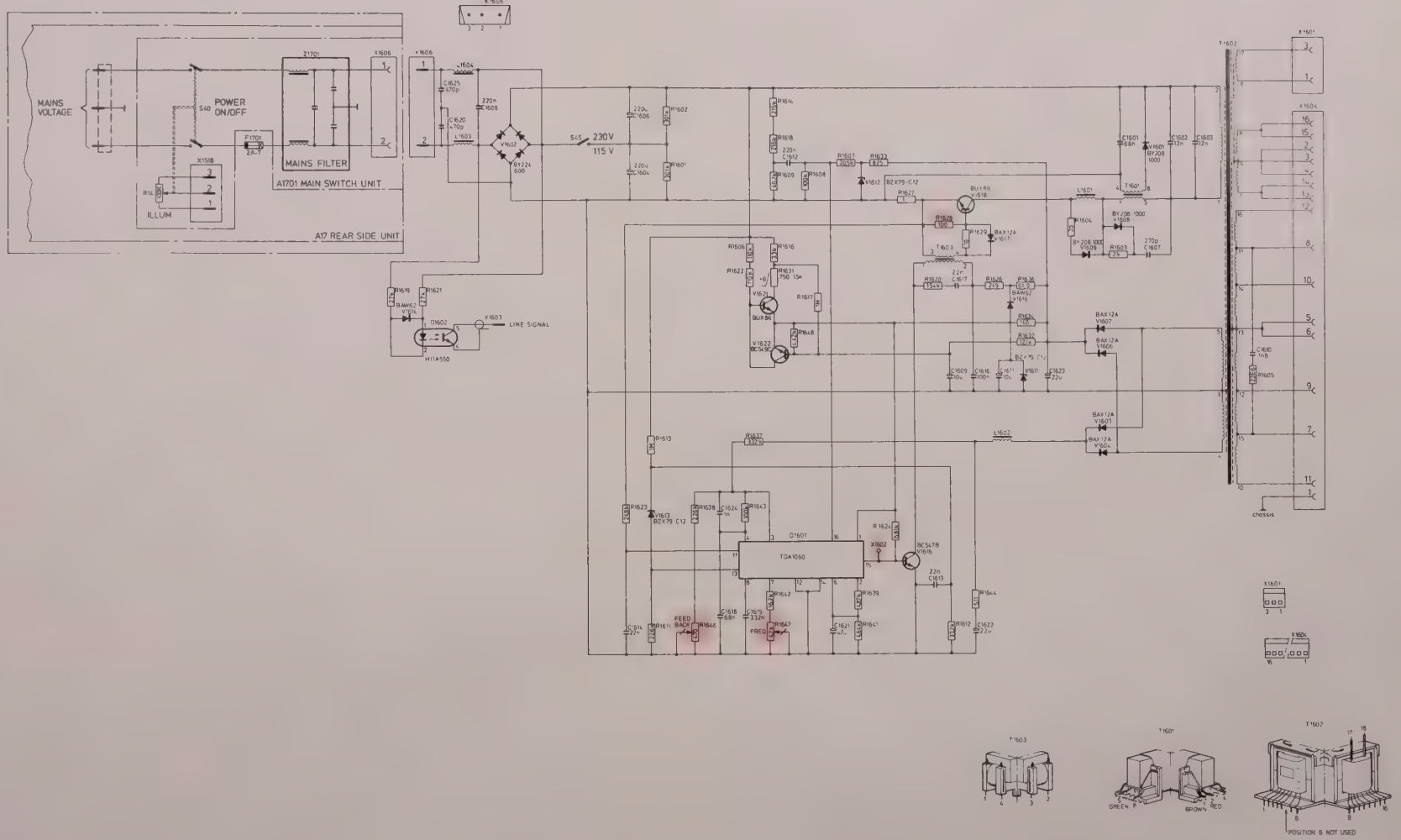

Fig. 6.2.63.

AC POWER UNIT

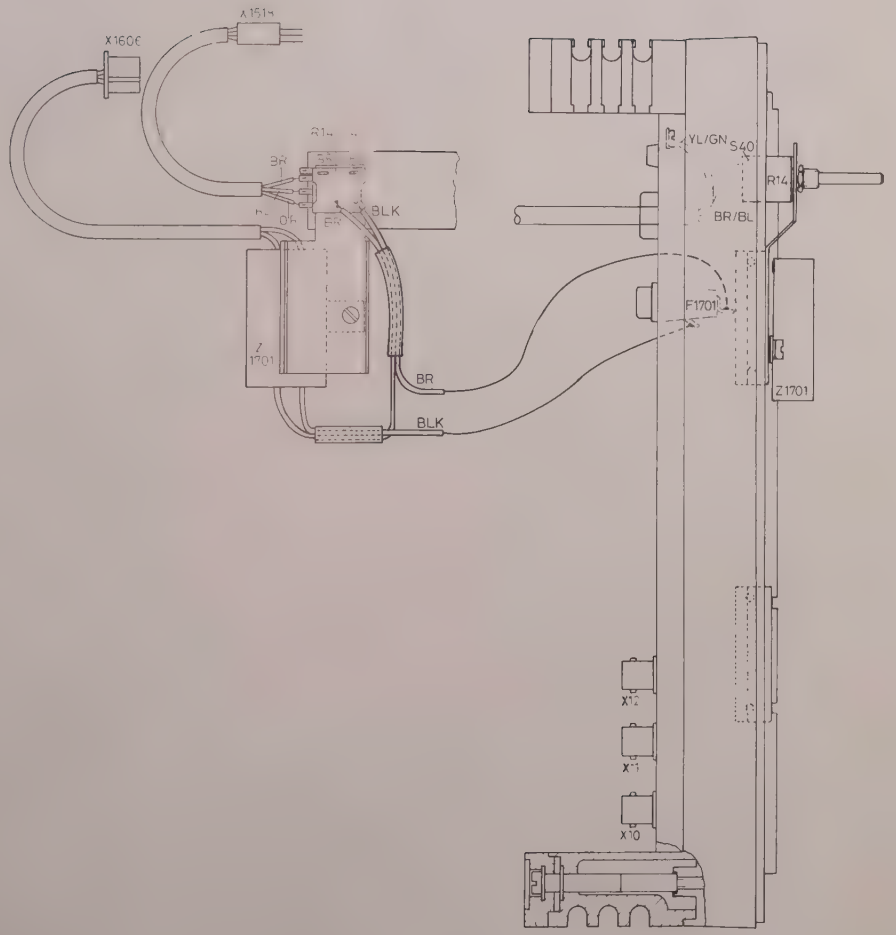

6.2.17. Rear side unit A17

The rear side unit consists of an aluminium rear cast on which the following items are mounted.

- ILLUM. control R14 - ON/OFF switch S40
- Mains filter Z1701
- BNC output sockets X10-X11-X12 for PLOT output signals
- Fuseholder F1701 and fuse.

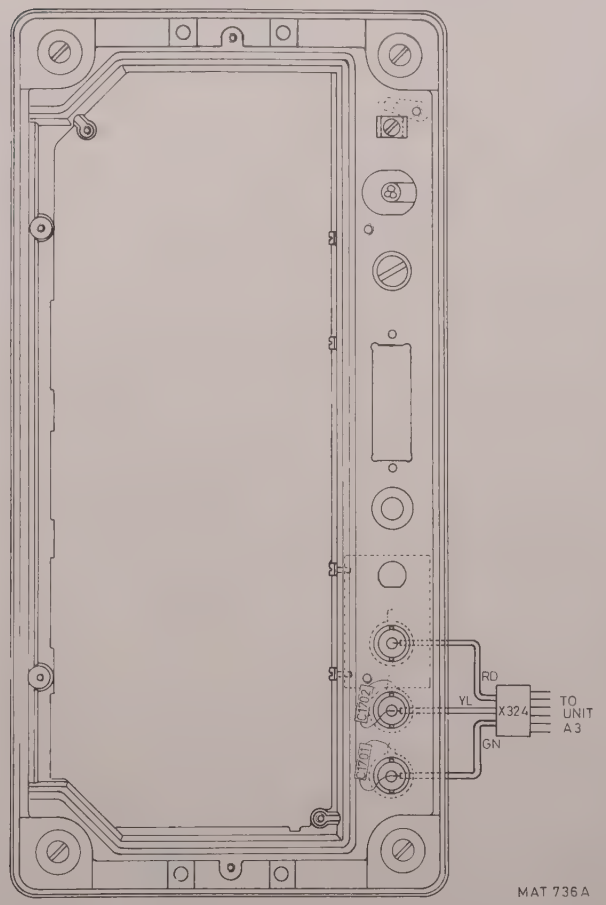

Fig. 6.2.64.

6.2.18. Delay line unit A18

Unit A18 is the delay line unit, which is mounted in the instrument under the C.R.T.

The unit is electrically connected between the channel switch and the delay line compensation amplifier on unit A21.

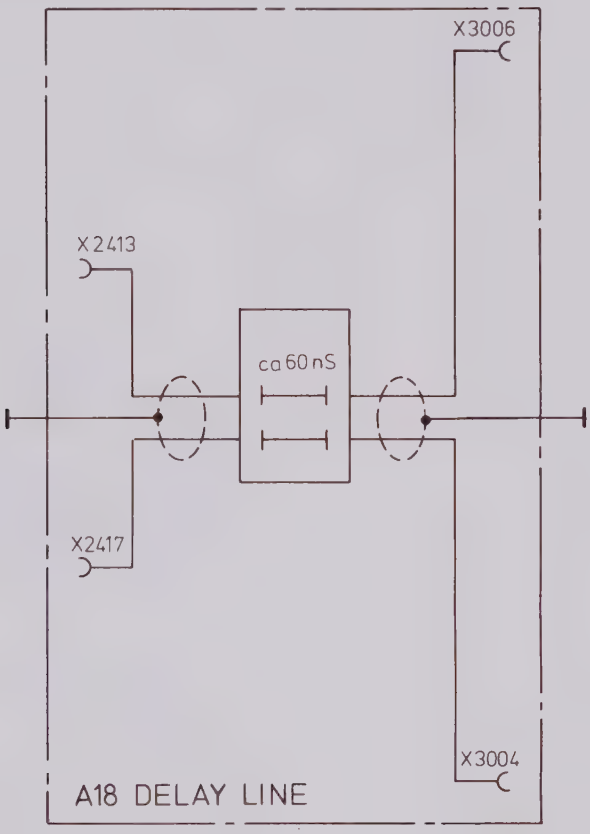

Fig. 6.2.65.

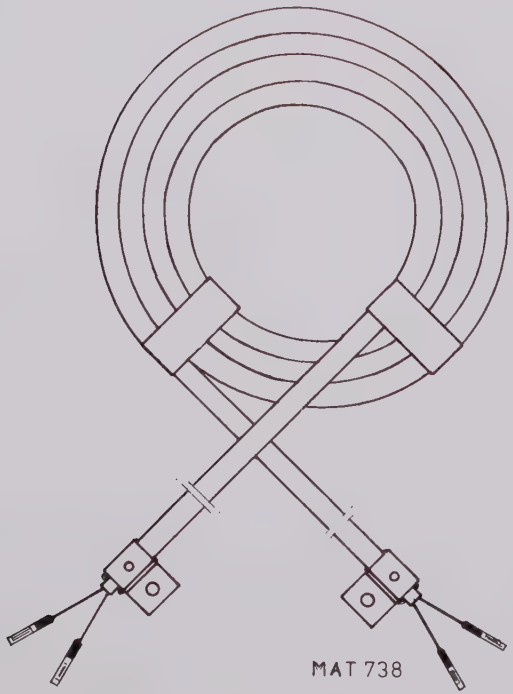

Fig. 6.2.66.

6.2.19. C.R.T. socket A19

The C.R.T. socket unit A19 consists of the socket itself (X1901) and two cables with the connectors X1506 and X2002.

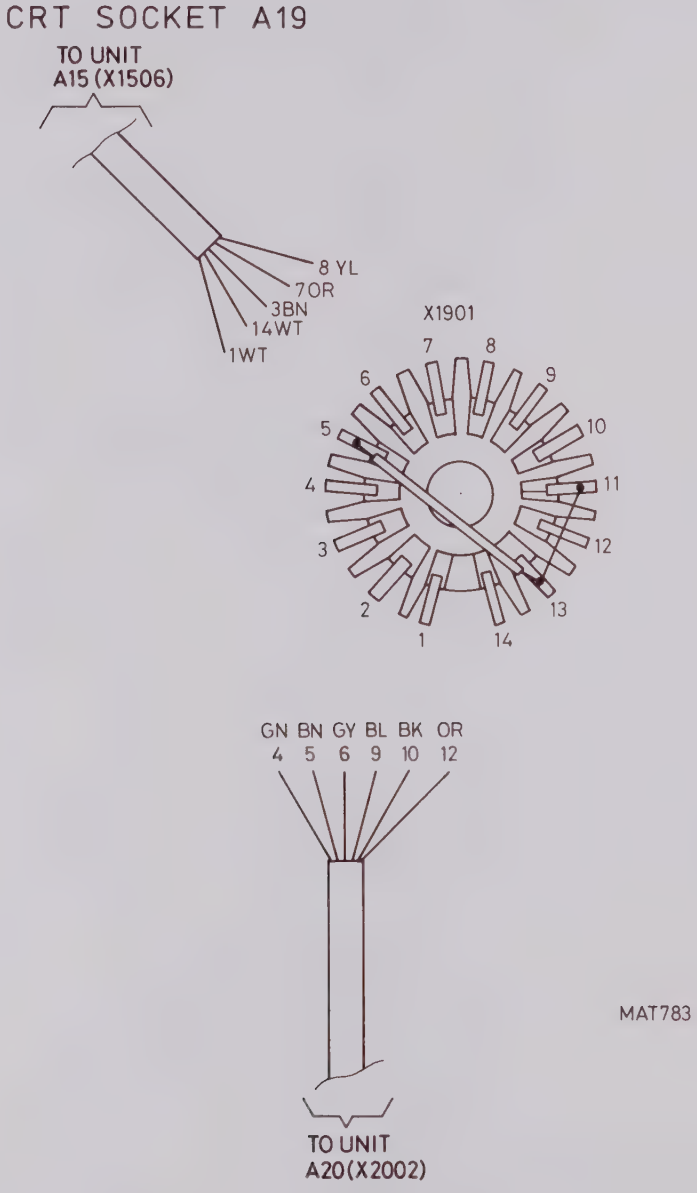

Fig. 6.2.67.

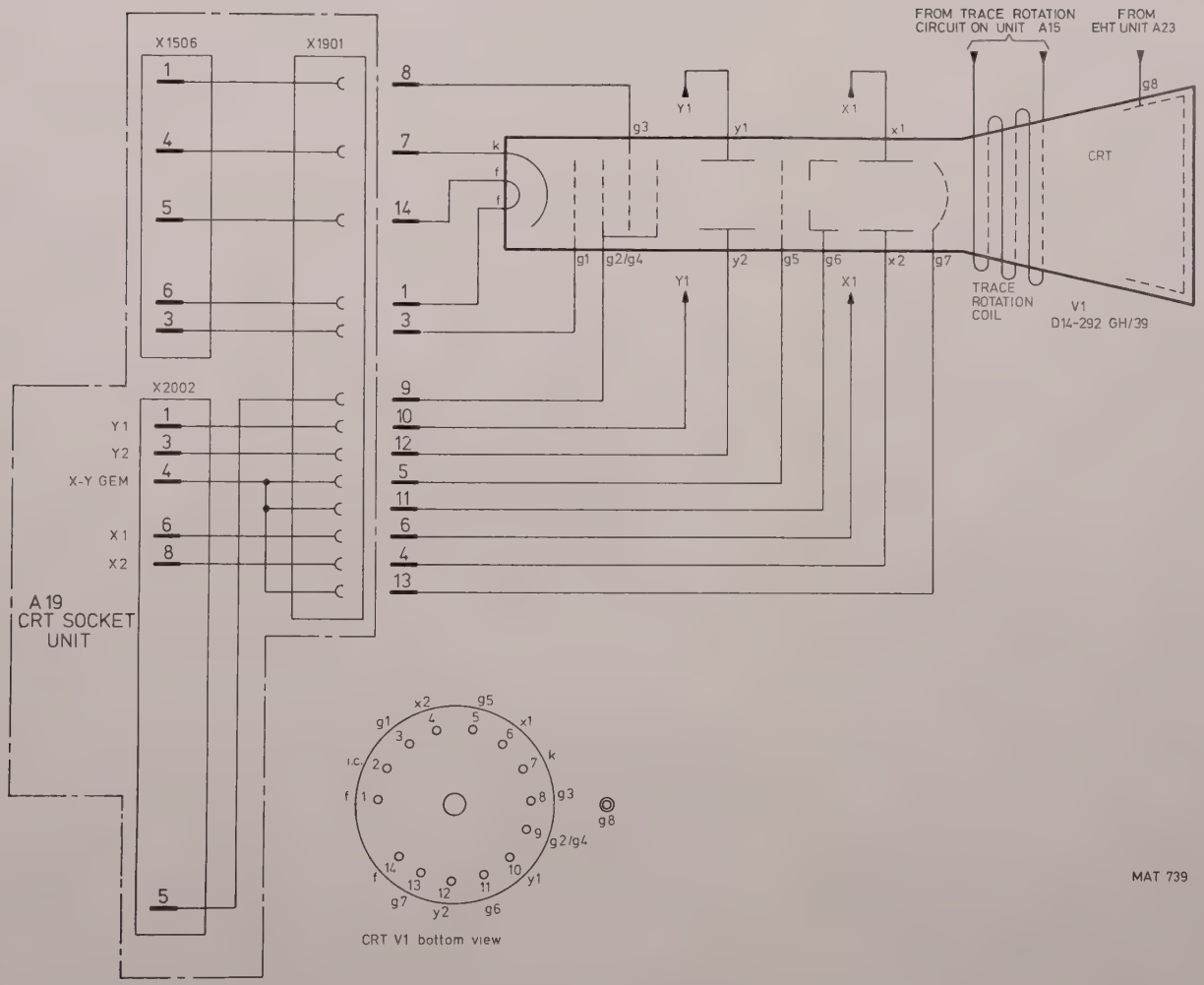
FROM TRACE ROTATION CIRCUIT ON UNIT A15
FROM EHT UNIT A23
X1506
X1901
X2002
A19 CRT SOCKET UNIT
Y1
Y2
X-Y GEM
X1
X2
CRT
TRACE ROTATION COIL
V1 D14-292 GH/39
g1
g2/g4
g3
g5
g6
g7
g8
x1
x2
y1
y2
k
f
i.c.
CRT V1 bottom view
MAT 739

Fig. 6.2.68.

6.2.20. Final amplifier unit A20

The final amplifier unit consists of the following sections:

- Dot-join system
- Position control system
- Final X and Y amplifiers

6.2.20.1. The Dot-join system

The dot-join system provides the facility for interconnecting the dots on the c.r.t. display to enable a continuous line to be traced. This means that a sawtooth voltage has to be applied to the final amplifier between the dots. The amplitude between adjacent dots in the Y direction controls the amplitude of the sawtooth generator (D2004 and associated components).

Four different signal modes are possible at the input of the dot-join system YDAC:

1. $A_0\ A_1\ A_2\ A_3\ A_4$ ..... A_n
2. $B_0\ B_1\ B_2\ B_3\ B_4$ ..... B_n
3. $A_0B_0\ A_1B_1\ A_2B_2$ ..... A_nB_n
4. $B_0A_0\ B_1A_1\ B_2A_2$ ..... B_nA_n

In these modes, the voltages to be applied to the current source of the sawtooth generator are:

1. $A_1\text{-}A_0; A_2\text{-}A_1; A_3\text{-}A_2; A_4\text{-}A_3; A_n\text{-}A_{(n-1)}$
2. $B_1\text{-}B_0; B_2\text{-}B_1; B_3\text{-}B_2; B_4\text{-}B_3; B_n\text{-}B_{(n-1)}$
3. $A_1\text{-}A_0; B_1\text{-}B_0; A_2\text{-}A_1; B_2\text{-}B_1;$ ..... $A_n\text{-}A_{(n-1)}; B_n\text{-}B_{(n-1)}$
4. $B_1\text{-}B_0; A_1\text{-}A_0; B_2\text{-}B_1; A_2\text{-}A_1;$ ..... $B_n\text{-}B_{(n-1)}; A_n\text{-}A_{(n-1)}$

Circuit D2007 serves to subtract the signals that are derived from multiplexer D2011 via buffers D2009. In order to obtain the correct signals at the outputs of D2011, multiplexers D2017 and D2018 together with three sample-and-hold gates, in combination with buffers, are introduced.

The sample-and-hold gates are controlled by the TRSH signal (trigger sample hold) which is applied to input 3 of D2018. Depending on the signals Q_0 and Q_1, one of the sample-and-hold circuits D2019, D2026 or D2024 follows the YDAC signal while the other two are holding the information of the last sample, and the sample before it. By means of the Q_0 and Q_1 pulses, the system is scanning the YDAC signal so an analog-shift register is formed.

Signals Q_0 and Q_1 are generated on the delay trigger unit A13. These signals are derived from the write signal $\overline{WR}$ generated by the microprocessor.
Multiplexer D2011 switches the correct signals to the subtract circuit D2007 via the buffer amplifiers D2009. The correct signals are:

- in single channel mode; every time the mean amplitude of two sequential samples is switched to the subtractor
- in dual-channel-mode; two sequential samples of channel A and the two sequential samples of channel B. (see timing diagram)

The multiplexer D2006 serves to discharge the sawtooth capacitor C2007 and in the case of the 'DOTS' mode, this capacitor is short-circuited so that separate dots are displayed on the screen.
The output of the sawtooth generator is applied to the summing point at the input 2 of D2004. At input 3 of D2004 a crosstalk suppression voltage is present, derived from the multiplexer D2017-3.

For the X channel, the dot-join system functions as follows:

The XDAC signal is applied to input 2 of amplifier D2021. A sawtooth voltage is also applied to that input. The ramp of this voltage is determined by signal SINGLE, which switches multiplexer D2013 so that in single channel operation capacitors C2027 and C2014 are connected in parallel; in dual-channel operation, only C2014 is switched into circuit. The duration of the ramp is determined by the signal RESDJ, which switches multiplexer D2013 so that the capacitor(s) will be discharged.

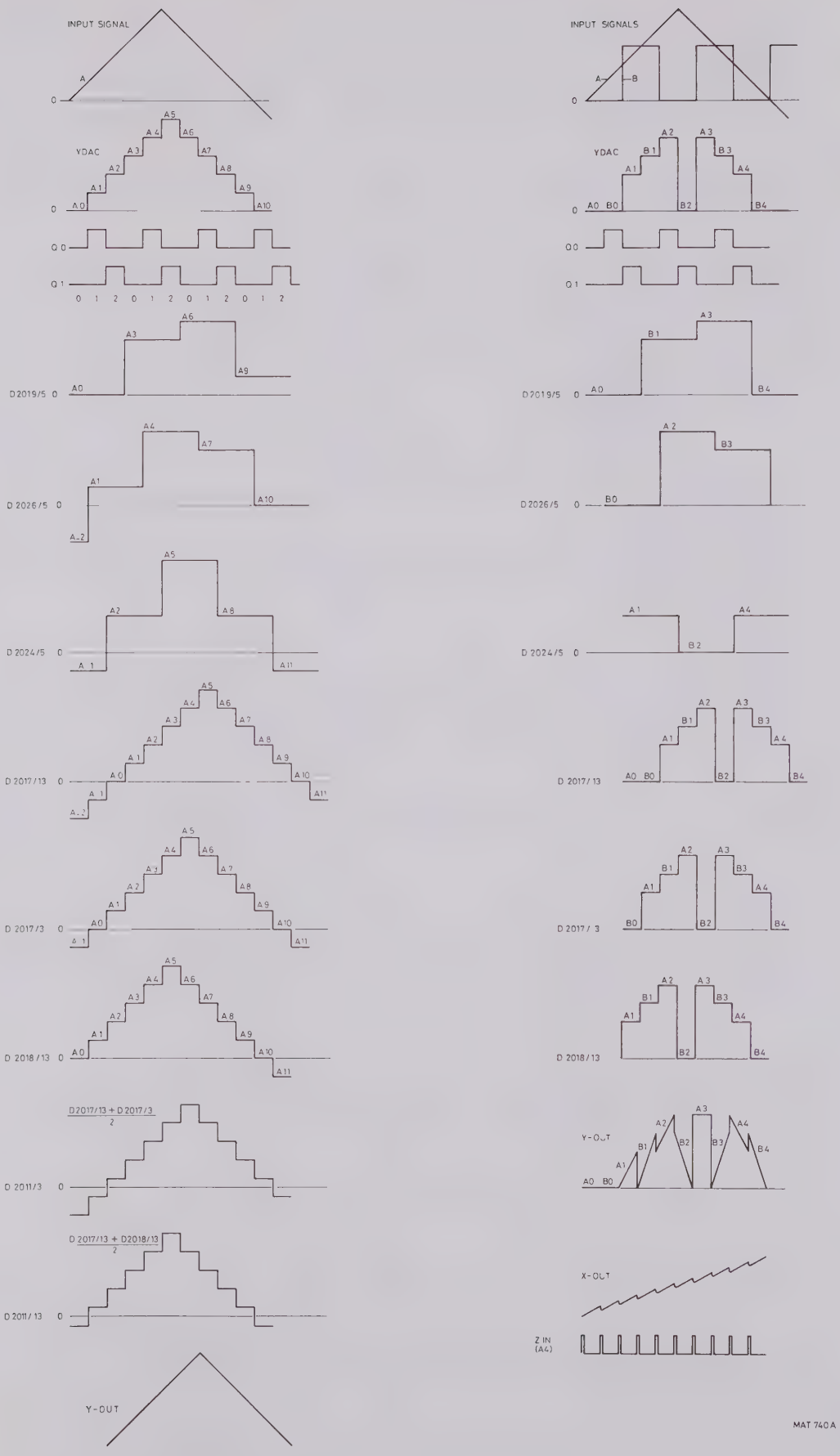
INPUT SIGNAL
A
0
YDAC
A0 A1 A2 A3 A4 A5 A6 A7 A8 A9 A10
Q 0
Q 1
0 1 2 0 1 2 0 1 2 0 1 2
D 2019/5
D 2026/5
D 2024/5
D 2017/13
D 2017/3
D 2018/13
D2017/13 + D2017/3 / 2
D 2011/3
D 2017/13 + D2018/13 / 2
D 2011/13
Y-OUT
INPUT SIGNALS
A
B
B0 B1 B2 B3 B4
X-OUT
Z IN (A4)
MAT 740A

Fig. 6.2.69.

At pin 3 of D2023 the X OUT signal is available.
This signal may be:
– with no DOT-JOIN facility, a staircase voltage.
– with DOT-JOIN facility, a staircase voltage with a sawtooth voltage on every stair.

6.2.20.2. Y-Position Control System

In the two modes Yx1 and Yx5, a different method of position control is employed for each.

Yx1 mode

In this mode, two different voltages are added to the signal at the summing point (D2001-2):
– A preset voltage for position determination of the displayed memories on the c.r.t. screen.
– An adjustable voltage to position the displayed memories on the screen.

The preset voltage is selected by multiplexer D2012 output 13 and applied to the summing point via D2008 and buffer amplifier D2002 (5.6.7).

The selection of the corresponding memory is controlled by the $\overline{OER0}$ ... $\overline{OER2}$ signals generated on RAM unit A6.
The adjustable voltage is selected by multiplexer D2012 output 3 and applied to the summing point via buffer amplifier D2002 (1,2,3).

The Y*OUT signal is applied via D2008 output 12 and R2036 to the summing point if YEX is 0, as is the case in the Yx1 mode.

Yx5 mode

The preset voltage must not be added in the Yx5 mode, since the base-line of all displayed memories is now situated on the centre-line of the c.r.t. screen (Y POS controls at mid-range position). Multiplexer D2008 is switched by signal YEX = 1 so that the output on pin 15 is connected to earth. This means that no additional voltage is applied to the summing point.

Moreover, the Y*OUT signal is applied to the summing point via resistors R2027 and R2023 in series. The value of these resistors is only one-fifth of R2036, so a 5 times magnified signal is applied to the summing point.

6.2.20.3. Final Y Amplifier

The output of the summing amplifier D2001 (2,3,6) is applied to the differential amplifier V2001 and V2021. The constant emitter current is derived from the current source V2028 and its associated components. Variation in the collector current results in a control voltage for V2006 and V2013, which produces output signals Y2 and Y1 to drive the c.r.t. deflection plates.

6.2.20.4. Final X Amplifier

To obtain the possibility of magnification in the X direction, integrated circuit D2023 is used. This circuit comprises a Darlington pair input stage to obtain a symmetrical signal; a buffer stage and a continuous gain adjustment facility for X magnnification and for X gain.

The final stage functions in a similar way to that of the final Y stage.

6.2.20.5. CAL circuit

The lower part of multiplexer D2008 is controlled by a frequency of 2.5 kHz, derived from the microprocessor crystal frequency of 5 MHz by dividers on the time-base unit.

Input 3 of D2003 is switched between pins 3 and 5 of D2008, i.e. between 1 V and 0 V. Amplifier D2003 serves as a follower circuit with an output of 3 V, adjustable by means of R2017.

INCOMING SIGNAL	OUTGOING SIGNAL	GENERATED ON UNIT	USED ON UNIT	DESCRIPTION
ASTIGM	ASTIGM	A15	A20	Astigmatism
AVSB		A13		Logic 0 in X = A/Y = B mode
DJ		A13		Dot join signal
ENKEL		A13		Single channel mode
OERØ		A6		Output enable RAMØ
OER1		A6		Output enable RAM1
OER2		A6		Output enable RAM2
POSØ		A202		Slider of ACCU position control
POS1		A202		Slider of STO1 position control
POS2		A202		Slider of STO2 position control
POS3		A202		Slider of STO3 position control
QØ		A13		Control signal for dot join
Q1		A13		Control signal for dot join
RESDJ		A13		Reset dot join
TRSH		A13		Trigger for dot join sample and hold
	X1	A20	A19	Horizontal deflection signal
	X2	A20	A19	Horizontal deflection signal
XDAC		A6		Horizontal DAC output signal
XMAGN		A202		Slider of X MAGN control
	XOUT	A20	A13	Horizontal output signal
XPOS		A202		Slider of X POSITION control
	X-Y GEM	A20	A19	Geometry control signal
	Y1	A20	A19	Vertical deflection signal
	Y2	A20	A19	Vertical deflection signal
YDAC		A6		Vertical DAC output signal
YEX		A13		Y-expand
	YOUT	A20	A13	Vertical output signal
ZDJ		A13		Z dot join
2.5 kHz		A12		
+5 V		A15		
+6 V		A15		
–6 V		A15		
+12 V		A15		
–12 V		A15		
+40 V		A15		
+135 V		A15		
–135 V		A15		
▬		A15		

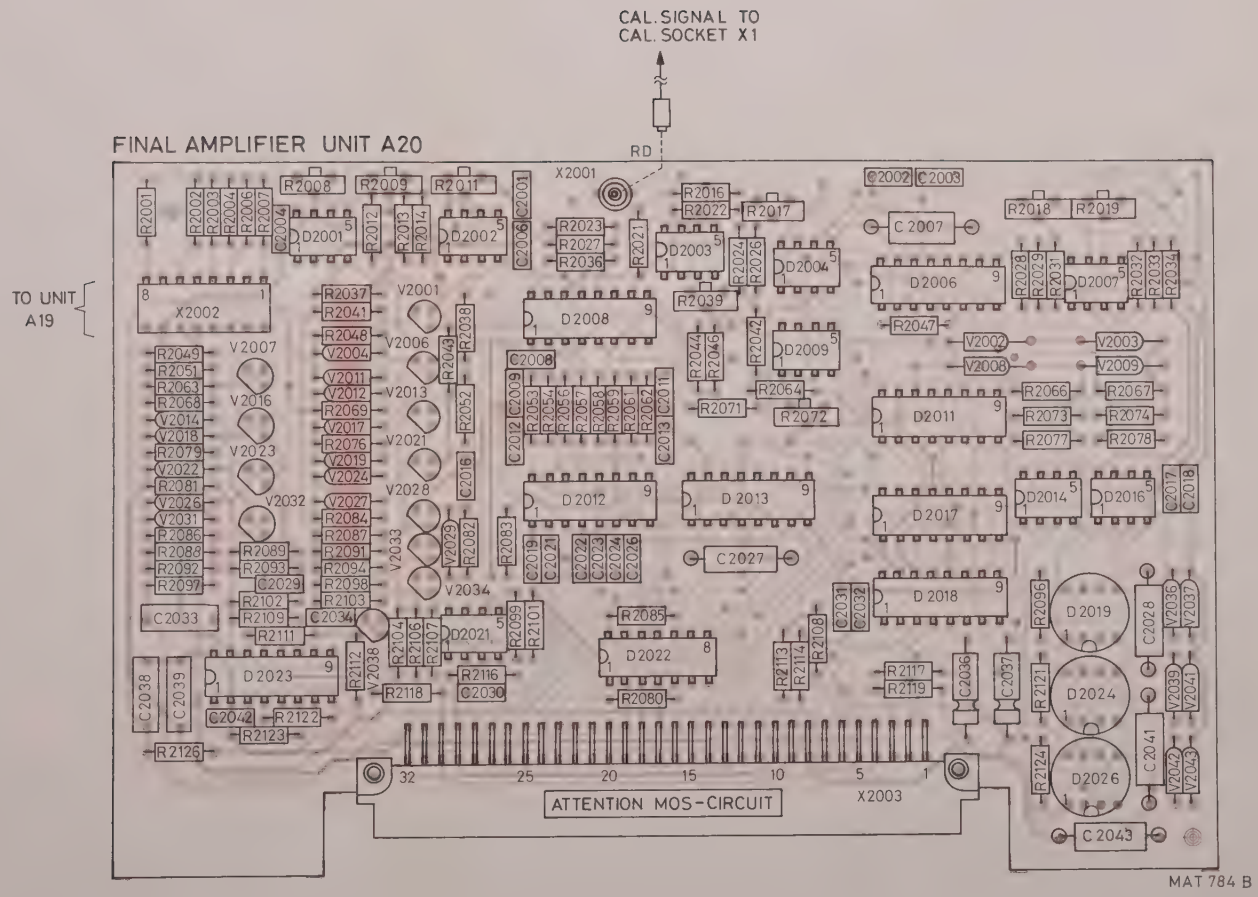
CAL. SIGNAL TO
CAL. SOCKET X1
RD
FINAL AMPLIFIER UNIT A20
TO UNIT
A19
X2001
X2002
X2003
D2001
D2002
D2003
D2004
D2006
D2007
D2008
D2009
D2011
D2012
D 2013
D2014
D2016
D2017
D 2018
D2019
D2021
D2022
D 2023
D2024
D2026
C 2007
C 2027
C 2043
V2001
V2006
V2007
V2013
V2016
V2021
V2023
V2028
V2032
V2034
R2001
R2008
R2009
R2011
R2016
R2017
R2018
R2019
R2022
R2023
R2027
R2036
R2039
R2047
R2064
R2071
R2072
ATTENTION MOS-CIRCUIT
32
25
20
15
10
5
1
MAT 784 B

Fig. 6.2.70.

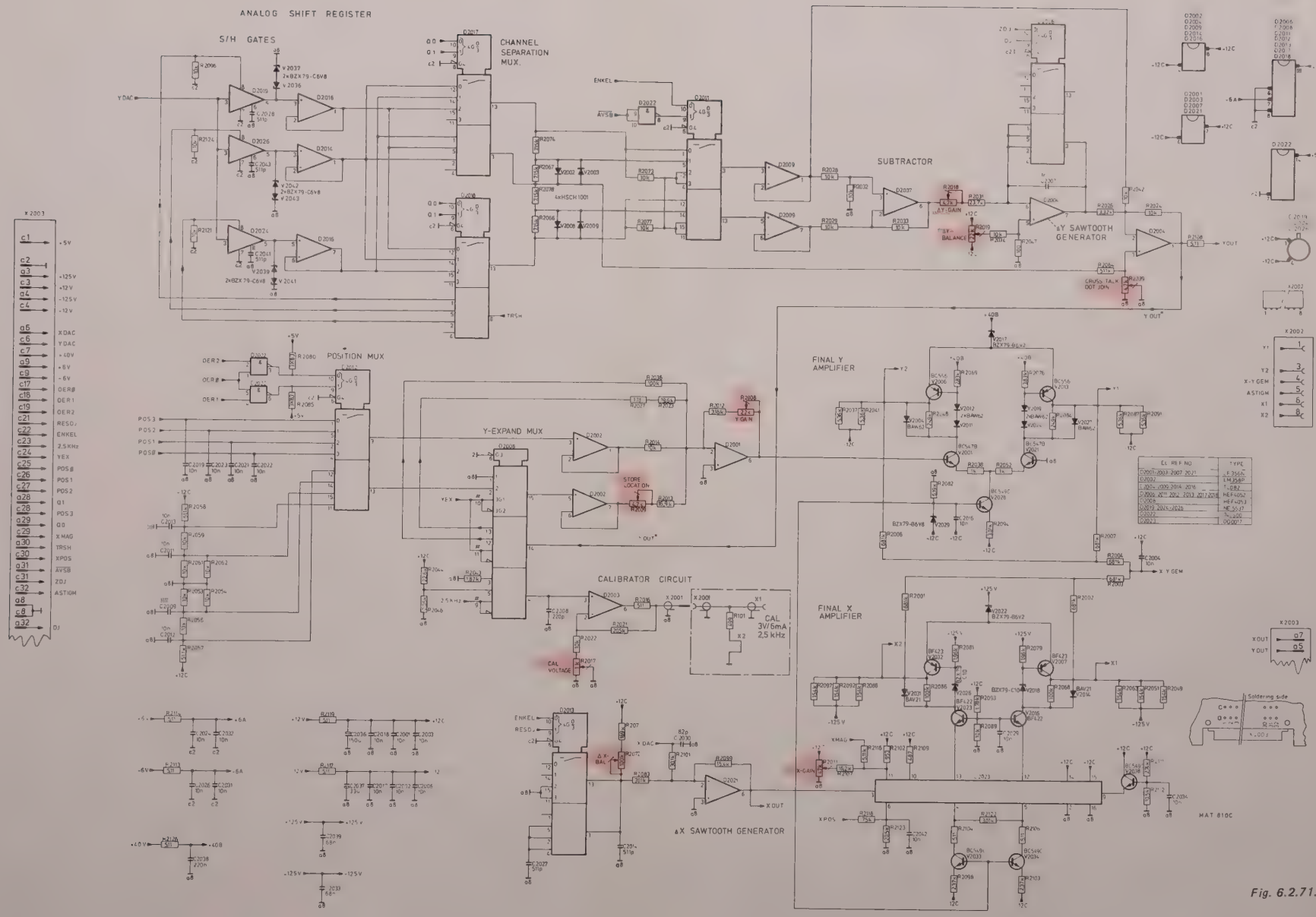
ANALOG SHIFT REGISTER
S/H GATES
CHANNEL SEPARATION MUX.
SUBTRACTOR
+Y SAWTOOTH GENERATOR
POSITION MUX
Y-EXPAND MUX
CALIBRATOR CIRCUIT
FINAL Y AMPLIFIER
FINAL X AMPLIFIER
-X SAWTOOTH GENERATOR
CAL 3V/6mA 2,5 kHz
MAT 810C
A20 FINAL AMPL UNIT

Fig. 6.2.71.

6.2.21. Input amplifier unit A21

6.2.21.1. General

The input amplifier unit is sub-divided into the following sections, as shown in the block diagram.
- Input attenuator
- Amplifier
- Channel switch and mode switch
- Delay line compensation/Track & Hold gate
- Logic circuits (control interfaces)

Briefly, the channel input attenuator reduces the input signal according to the front-panel switch settings or remote signals, and converts it from high to low impedance.
The asymmetrical output signal is applied to the amplifier section to give a symmetrical output, an amplified trigger pick-off and an offset facility. A buffer stage provides for signal inversion and offset before feeding the channel and mode switch section. Here the logic control signals are used to switch the appropriate channels and display modes to the ADC in the storage section of the oscilloscope.

6.2.21.2. Input attenuator

The input stage comprises two identical attenuator circuits. For convenience, only the channel A attenuator is described.

The input signal can be either a.c. or d.c. coupled (via C2476 or K2412) to the attenuators.

Basically, the input attenuator comprises a triple high-ohmic voltage divider and an impedance converter in conjunction with a drift correction circuit. The impedance converter (V2451, V2448) provides a zero level output, adjusted by potentiometer R2643, which feeds a low-ohmic attenuator.

Overall, the attenuation of the input stage is determined by the combination of the selected sections of the two attenuators, according to the setting of the front-panel AMPL/DIV switch. The control sequence is as follows:

The position of the AMPL/DIV switch, the AC/DC switch and the '0' switch are decoded and applied to the reed relays and FET switches (D2411) via the microprocessor system. The reed relays and the FET switches determine the position of the attenuators and are controlled from two 8-bit output ports (D2424, D2426) in the logic circuit. These output ports are controlled via the data-bus and can also be controlled by the IEC-bus interface for remote operation.

The three sections of the high-ohmic voltage divider have an attenuation factor of 1.25, 12,5 and 125 times.

If the front-panel pushbutton '0' is depressed, reed switch K2411 closes and all other reed switches are open. Control for this action is via the output ports of the microprocessor system. With K2411 closed, the input signal is not connected to the attenuator and the impedance converter, via R2668 and R2578, is switched to zero level.

The low-ohmic voltage divider, following the input impedance converter, attenuates 1, 2 or 5 times. Taking the overall combinations, together with the 1 or 10 times gain of the intermediate amplifier, twelve different deflection coefficients can be chosen.

To obtain the correct frequency characteristic, the attenuator sections are shunted by capacitors. Trimming capacitors provide for the adjustment of the capacitive divider sections for a.c. voltages to the same ratio of the resistive dividers for d.c. voltages. In this way, the divider sections are independent of frequency.
A diode clipper in the gate circuit of the field-effect transistor (FET V2451) protects it against excessive negative swings, the FET being inherently protected against excessive positive swings.

The high frequency path for the input signal consists of series capacitor C504 and the FET connected in a source-follower configuration. The low-frequency path comprises an operational amplifier and an error amplifier, which corrects the output signal related to the input signal of the impedance converter over a frequency range from d.c. to 1 kHz. The output of the error amplifier (D2416) is fed to the input of the operational amplifier to replace the missing low frequency portions of the signal. In this way, the drift is reduced to a minimum.

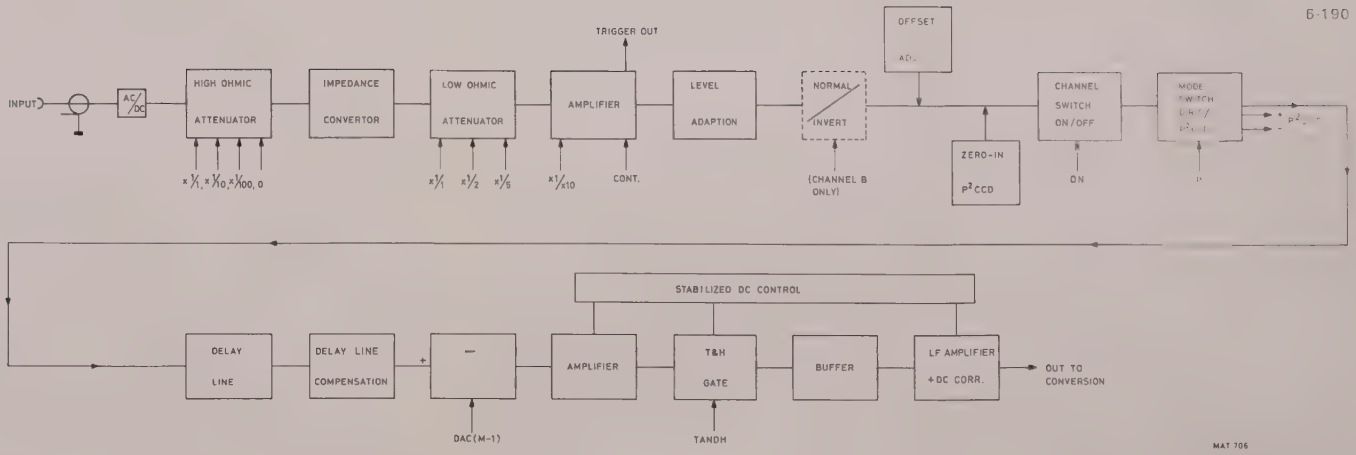

Fig. 6.2.72.

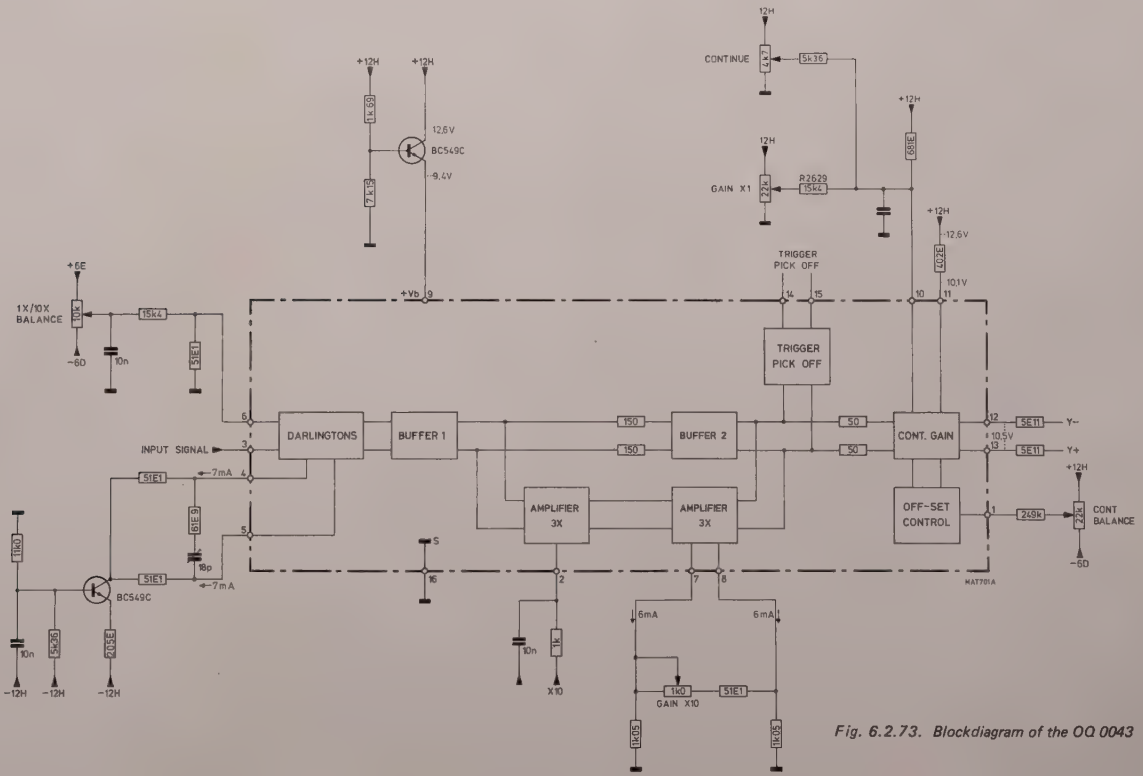

Fig. 6.2.73. Blockdiagram of the OQ 0043

The output of the impedance converter is applied to the 1, 2 or 5 times voltage divider. The dividing factors are controlled by FET switches (D2411), which in turn are controlled, via operational amplifiers (D2421), by the output ports of the microprocessor system.

6.2.21.3. Amplifier

a. Pre-amplifier

The output of the 1-2-5 divider stage is asymmetrically applied to pin 3 of pre-amplifier D2413 (OQ 0043). The block diagram of the OQ 0043 is given in the figure and is drawn with the relevant components as mounted in this oscilloscope.

The supply voltage is routed via a temperature-compensating circuit connected to pin 9. The OQ 0043 consists of input Darlington pairs to provide a symmetrical signal from the asymmetrical input; a buffer stage; two x3 amplifiers in series and switched in parallel to a buffer stage; trigger pick-off after amplification; a continuous gain adjustment facility and an offset adjustment for the continuous control.

b. Buffer stage

The output of the OQ 0043 is symmetrically applied to a buffer stage. In order to obtain the inverting mode for Channel B (PULL FOR –B), the buffer stage in this channel is provided with two extra transistors (V2419, V2424).
If the channel B invert switch is pulled, the microprocessor system decodes this setting and applies a high voltage to the base of V2408, which conducts.
Consequently, transistors V2418 and V2426 switch off and V2419 and V2424 now conduct so that the signal path is inverted.

After this stage, an offset stage, adjustable from the front panel, adapts the current so that an offset adjustment of four times the voltage range is possible (OFFSET A - V2456; OFFSET B - V2414).

To obtain the facility for switching both A and B channels to zero, necessary in the P^{2}CCD mode (see Section 6.2.8.3), both current flows are switched to the supply voltage via transistors V2469 and V2473. To control the zero switching, the Acquisition Control Logic and the time-base system generate the signals NUL IN and P respectively. These signals are applied to a NAND gate, the output of which is fed to operational amplifier D2422 (pins 8, 9 and 10). A zero on the negative input results in a high level on the output and the transistors conduct, thus interrupting the signal current flow.

6.2.21.4. Channel switch and mode switch

The principle of this oscilloscope is such that the channel A and channel B signal is always stored in the chopped mode. The CHOP signal, which is derived from the acquisition control logic (A9), is applied to the channel switch via NAND gates (D2428, D2429 on the logic circuit) to determine the positions of the ON/OFF switches. The signals derived from the control gates are called A ON and B ON, these signals being applied via V2468 (V2428) to pins 9 and 11 of D2412 (D2404). If the signal ON is high, the transistor blocks, and via V2474 (V2433), the outer transistors on the right-hand side of D2412 (D2404) become conductive. If the signal ON is low, V2468 (V2428) is conductive and the inner right transistors become conductive, the signal current flow of Y+ and Y– is shunted via pins 13 and 15 of D2412 (D2404), so the channel is switched off.

The following switching modes are indicated in the figures:

– Channel A ON: similar to channel A P^{2}CCD mode
– Channel B ON: similar to channel B P^{2}CCD mode
} except for switching in D2409
– Channel A and B ON in ADD mode
– Dual channel P^{2}CCD mode (chopping is effected in P^{2}CCD)

In all modes except P^{2}CCD, chopping is effected by the channel switch.

To obtain a constant load for the supply voltages of the channel switch, it is necessary that the current remains the same, irrespective of the mode selected. Hence the reason for the alternative transistor loads. The relevant current paths are shown in the figures.

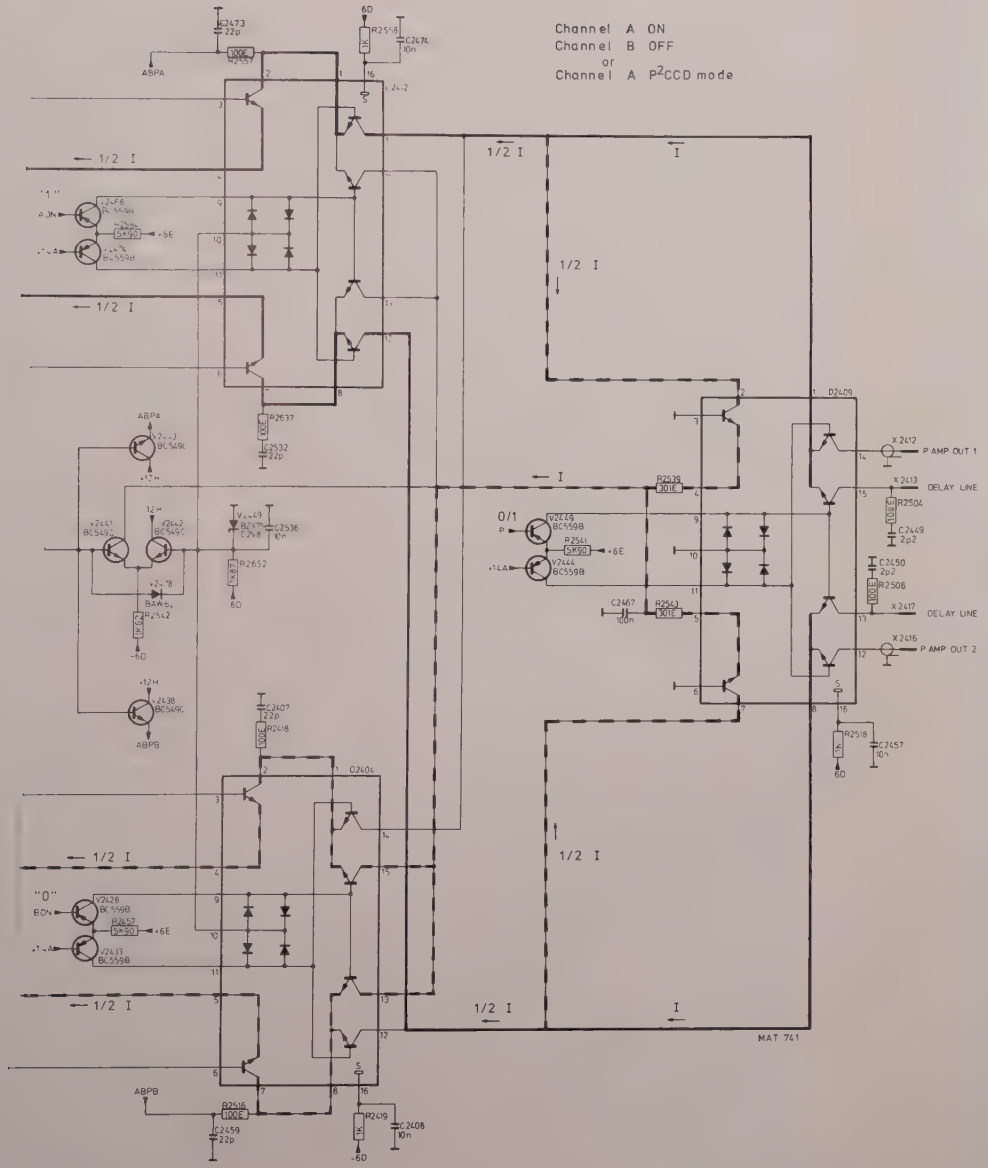

Fig. 6.2.75.

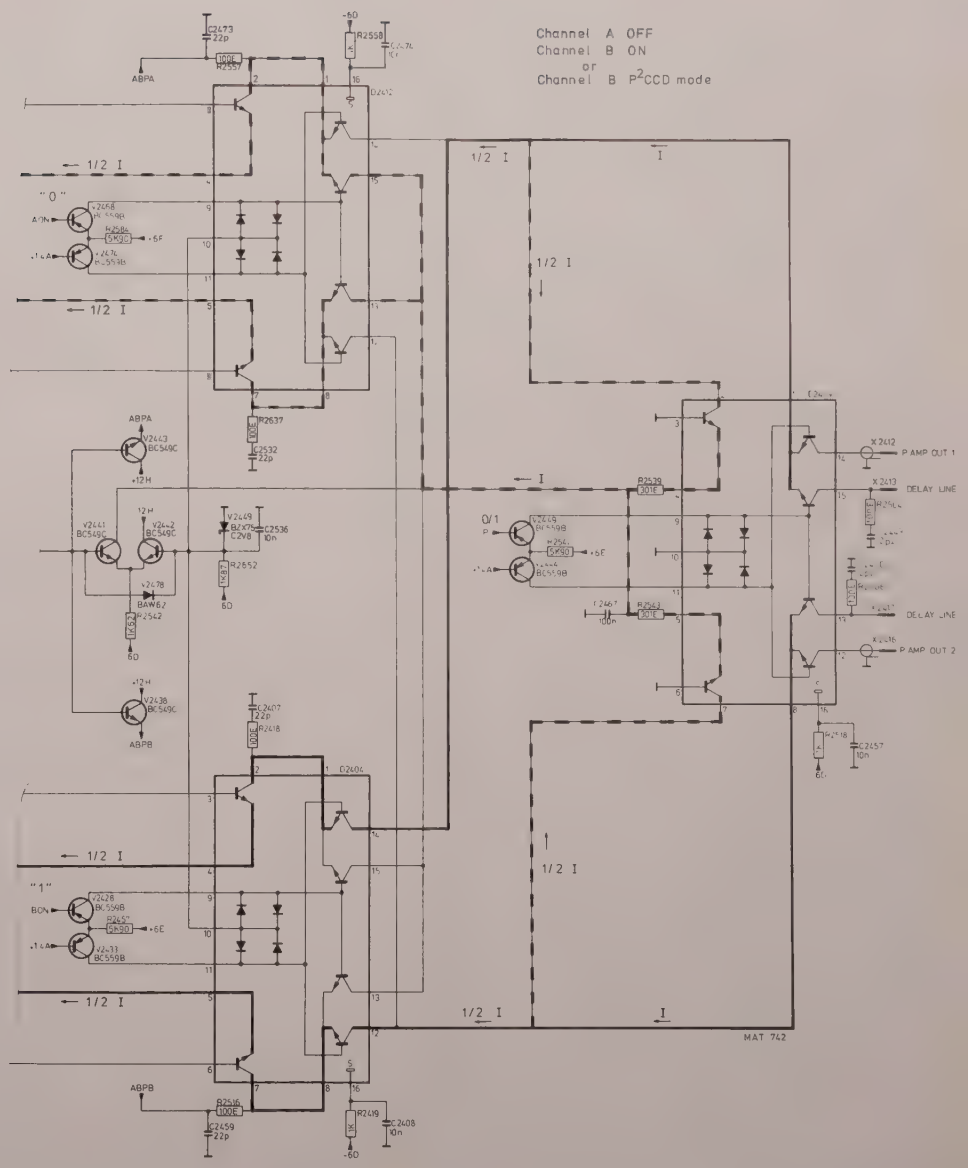

Fig. 6.2.76.

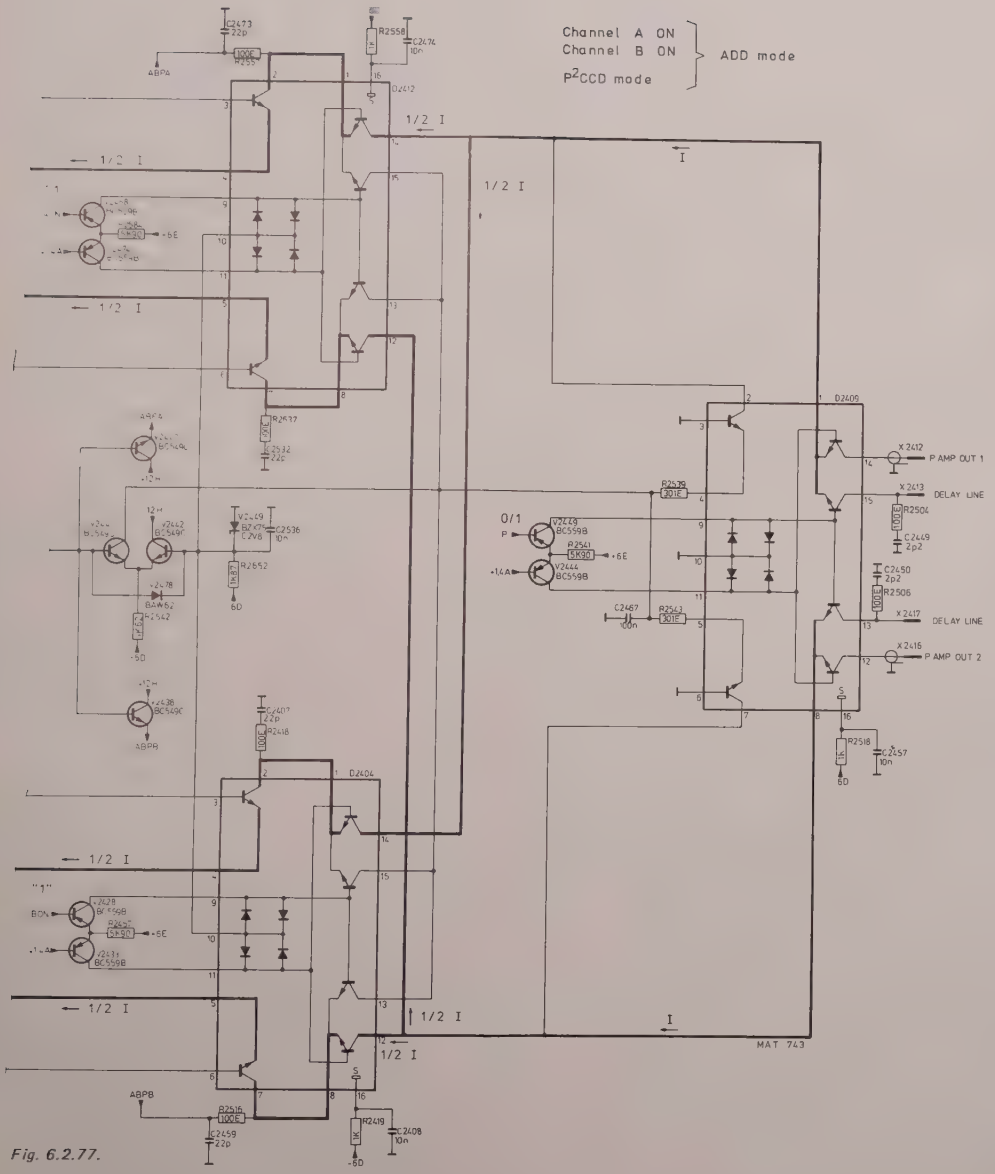

Fig. 6.2.77.

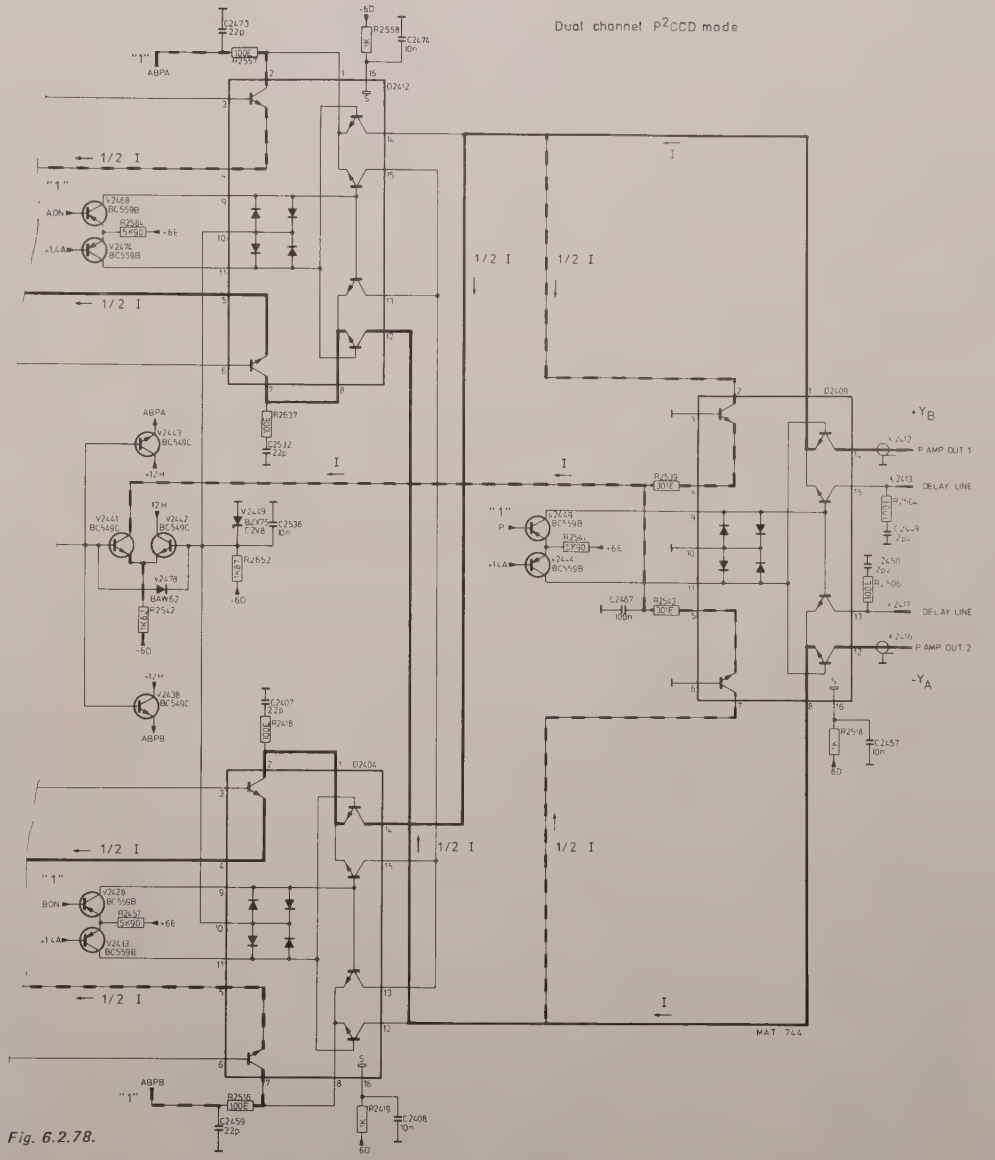

Fig. 6.2.78.

Integrated circuit D2409 serves to switch the signal either to the P2CCD amplifier or to the delay line.
If the signal P is high, the transistor V2449 blocks and V2444 becomes conductive. Consequently, the two outer right transistors of D2409 conduct and the signal is fed to the P AMP OUT 1 and P AMP OUT 2.
If the signal P is low, the two inner right transistors conduct and the signal is fed to the delay line. This occurs in the direct, roll and sampling mode.

6.2.21.5. Delay line compensation/Track and Hold Gate

A symmetrical delay line is mounted between the channel switch (via D2409) and a series feedback push-pull amplifier in combination with a shunt feedback push-pull amplifier.
The delay line is an symmetrically-mounted spiralled cable with characteristic impedance of 150 Ω and a delay of approximately 60 ns. The output is terminated by two series resistors, each of 75 Ω.

The emitter impedance of the series feedback stage (D3004) consists of RC frequency compensation networks.

For greater accuracy, it is preferable to measure the difference between an instantaneous analog signal sample and the previous signal sample rather than measuring each signal value separately.
This is done by recovering the previous sample that has been digitised, using a digital-to-analog converter and subtracting this value from the existing value to obtain the analog difference δV.

Transistors V3004 and V3003 are used to subtract the previous sample from the existing one. The sample to be subtracted, re-converted from the digital section, is called the DAC M-1. This voltage is converted into current and is applied to the emitter of the series feedback stage, D3004. As this signal is in antiphase it will be subtracted.

Because of the asymmetrical input to the Track and Hold (T & H) gate, the common-mode signal in addition to the supply voltage variation must be suppressed. For these reasons, the transistors V3001 and V3002 are introduced. The emitters are driven by a constant-current supply derived from the current source built up by an operational amplifier D3006 (pins 1, 2 and 3), which measures the voltage across resistor R3058 and drives V3008 to maintain constant current. The constant current drives transistors V3001, V3002 in such a way that the bias current is always constant.

The Track and Hold gate will now take a sample controlled by the signal TAND H. This signal is generated on the Trigger Unit A22. If the signal is low, the input signal is tracked. If the signal is high, the instantaneous value of the input signal is held momentarily. This gate is incapable of holding the sample long enough, without voltage droop, to convert it into a digital value. For this reason, a Sample and Hold gate is added on the Conversion Unit A8. The output signal of the Track and Hold gate is applied via a buffer amplifier to D3003, an operational amplifier (x5 gain approx.), which compensates the offset voltage. The output of the offset compensation circuit is applied via a multiplexer on the CCD logic unit A10 to the Sample and Hold gate on the Conversion Unit A8.

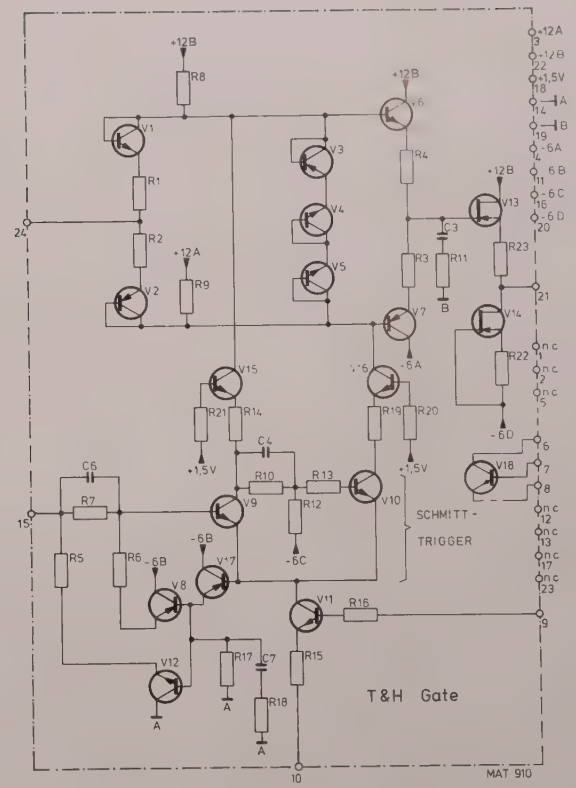

6.2.21.6. Logic circuits (control interfaces)

In order to activate the correct combination of reed relays, the microprocessor scans the following switches of both channel A and channel B:

AC/DC; 0 and AMPL/DIV switches.

To read the positions of the switches, an eight-input/four-output multiplexer (D2418) is addressed, each main loop by $\overline{IO}$Ø together with read pulse $\overline{RD}$.
Address line AØ ensures that D2418 is addressed by address 8Ø1E for channel A switching and 8Ø1F for channel B switching.
The output of multiplexer D2418 and D2419 is connected to the data-bus lines DØ ... D7 and read by the microprocessor system.

The switch settings are converted by the microprocessor system and are applied, via the data-bus, to the latches D2424. These outputs ports are enabled by the combination of the write pulse $\overline{WR}$; the input/output pulse IOØ, and for each port an address line (A1 and A2) Address D2424 is 8ØØ3. Address D2426 is 8ØØ5; address D2427 is 8ØØ6.
The outputs of these ports are fed to the reed relays; the following table indicates the reed relays that are active in relationship to the position of the switches:

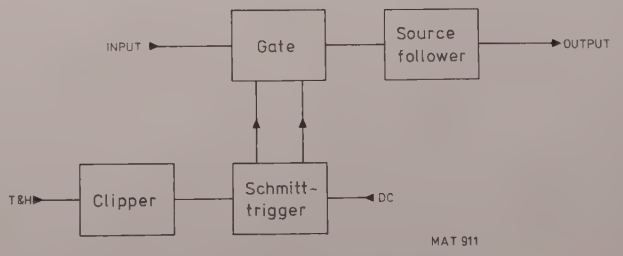

RANGE (x10 probe)	RANGE (x1 probe)	K2412	K2413	K2414	K2416	K2418	K2409	K2411
.1 V	10 mV	I/O	1	1	0	0	0	0
.2 V	20 mV	I/O	1	1	0	0	0	0
.5 V	50 mV	I/O	1	1	0	0	0	0
1 V	.1 V	I/O	1	1	0	0	0	0
2 V	.2 V	I/O	1	1	0	0	0	0
5 V	.5 V	I/O	1	1	0	0	0	0
10 V	1 V	I/O	0	0	1	1	0	0
20 V	2 V	I/O	0	0	1	1	0	0
50 V	5 V	I/O	0	0	1	1	0	0
.1 kV	10 V	I/O	0	0	0	0	1	1
.2 kV	20 V	I/O	0	0	0	0	1	1
.5 kV	50 V	I/O	0	0	0	0	1	1
0	0	I/O	0	0	0	0	0	1

The complete output of D2424 (and D2426) with the corresponding attenuator, AC/DC and 0 switch positions is given in the table below (D2426 is for channel B and is analog):

RANGE (x10 probe)	RANGE (x1 probe)	x10A D6	$x^1/5A$	$x^1/2A$ D5	$x^1/1A$ D4	$x^1/100A$*	$x^1/100A$ D3	$x^1/10A$ D2	x1A D1	A-DC D0
.1 V	10 mV	1	1	0	1	1	1	1	0	–
.2 V	20 mV	1	1	1	0	1	1	1	0	–
.5 V	50 mV	1	0	0	0	1	1	1	0	–
1 V	.1 V	0	1	0	1	1	1	1	0	–
2 V	.2 V	0	1	1	0	1	1	1	0	–
5 V	.5 V	0	0	0	0	1	1	1	0	–
10 V	1 V	0	1	0	1	1	1	0	1	–
20 V	2 V	0	1	1	0	1	1	0	1	–
50 V	5 V	0	0	0	0	1	1	0	1	–
.1 kV	10 V	0	1	0	1	0	0	1	1	–
.2 kV	20 V	0	1	1	0	0	0	1	1	–
.5 kV	50 V	0	0	0	0	0	0	1	1	–
0	0	0/1	0/1	0/1	0/1	0	1	1	1	0
AC	AC	–	–	–	–	–	–	–	–	1
DC	DC	–	–	–	–	–	–	–	–	0

Range indication

When using a probe with range indication, the microprocessor system calculates the attenuation of the probe, which is then displayed on the scale rings of the AMPL/DIV switches and also in the alphanumeric display. The microprocessor system obtains the information of the probe, via D2417, by the signals $\overline{PA0}$, $\overline{PA1}$, $\overline{PB0}$, $\overline{PB1}$ for channels A and B respectively.
These signals are decoded in the microprocessor system and then applied to the displays.

INCOMING SIGNAL	OUTGOING SIGNAL	GENERATED ON UNIT	USED ON UNIT	DESCRIPTION
AØ-1-2		A4		Address bits from system address bus
ACON		A202		Slider of channel A continuous control
BCON		A202		Slider of channel B continuous control
CHOP		A9		Chopper signal
DØ ... D7		A4		Data bits from system data bus
	DØ ... D7	A21	A4	Data bits to system data bus
DAC M-1		A7		DAC M-1 output signal
	DRS	A21	A10	Signal information in D-R and S mode
$\overline{\text{ERUN}}$		A22		Enable run signal
$\overline{\text{IOØ}}$		A4		I/O address decoding signal
NULIN		A9		Signal to switch vert. ampl. input to zero
OFFA		A202		Slider of channel A OFFSET control
OFFB		A202		Slider of channel B OFFSET control
P		A12		P-mode signal
	PAMPOUT1	A21	A11	Output signal for P^2CCD
	PAMPOUT2	A21	A11	Output signal for P^2CCD
$\overline{\text{RD}}$		A4		Signal READ from microprocessor
$\overline{\text{RECURR}}$		A22		Signal from RECURR switch
$\overline{\text{ROLL}}$		A22		Signal from ROLL switch
$\overline{\text{RUN}}$		A22		Signal from R/S-RESET switch
$\overline{\text{SINGLE}}$		A22		Signal from SINGLE switch
$\overline{\text{TANDH}}$		A22		Track and hold signal
$\overline{\text{WR}}$		A4		Signal WRITE from microprocessor
+6 V		A15		
–6 V		A15		
+12 V		A15		
–12 V		A15		
⏚		A15		

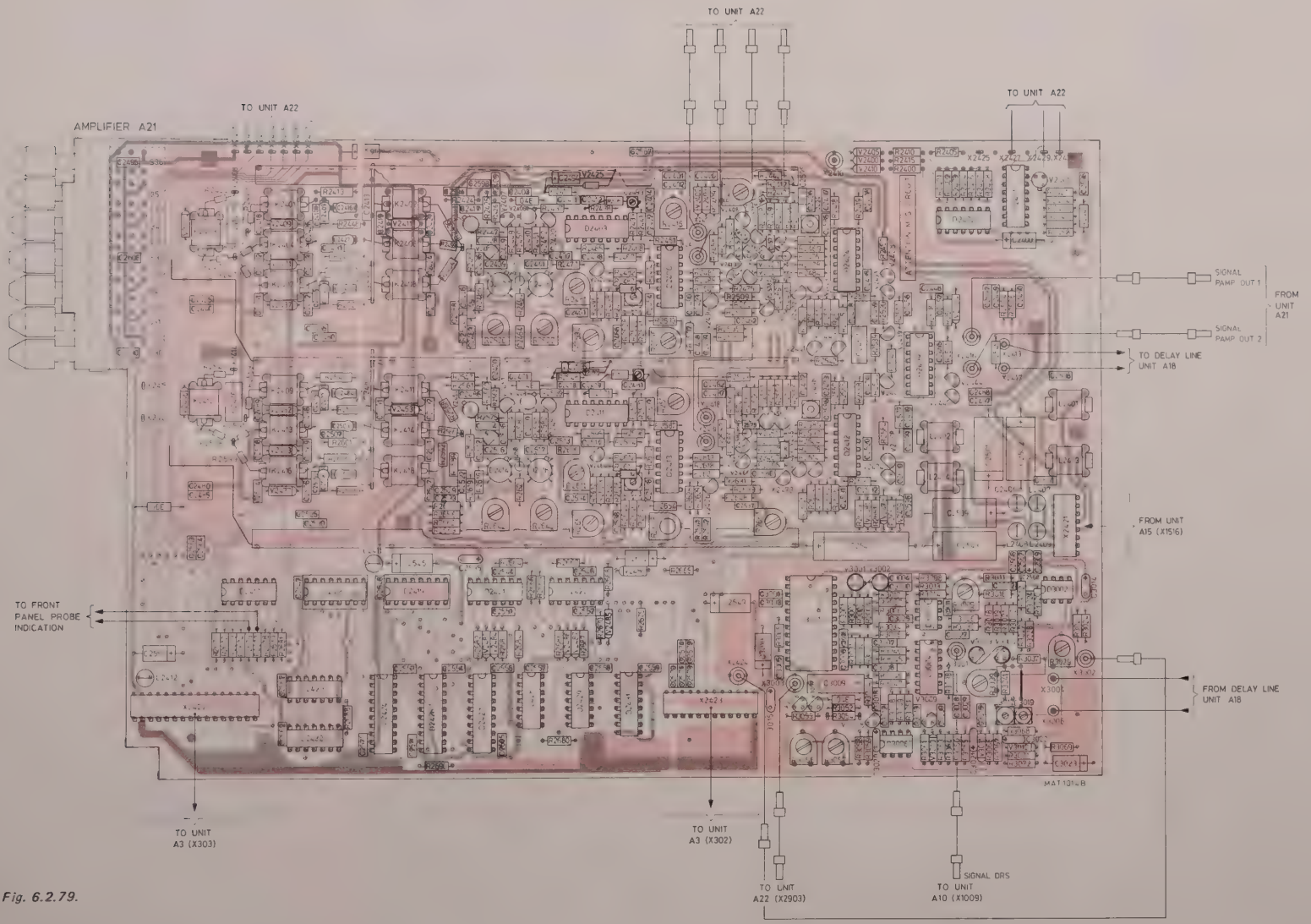
TO UNIT A22
TO UNIT A22
TO UNIT A22
AMPLIFIER A21
SIGNAL PAMP OUT 1
SIGNAL PAMP OUT 2
FROM UNIT A21
TO DELAY LINE UNIT A18
FROM UNIT A15 (X15/16)
FROM DELAY LINE UNIT A18
TO FRONT PANEL PROBE INDICATION
TO UNIT A3 (X303)
TO UNIT A3 (X302)
TO UNIT A22 (X2903)
SIGNAL DRS
TO UNIT A10 (X1009)

Fig. 6.2.79.

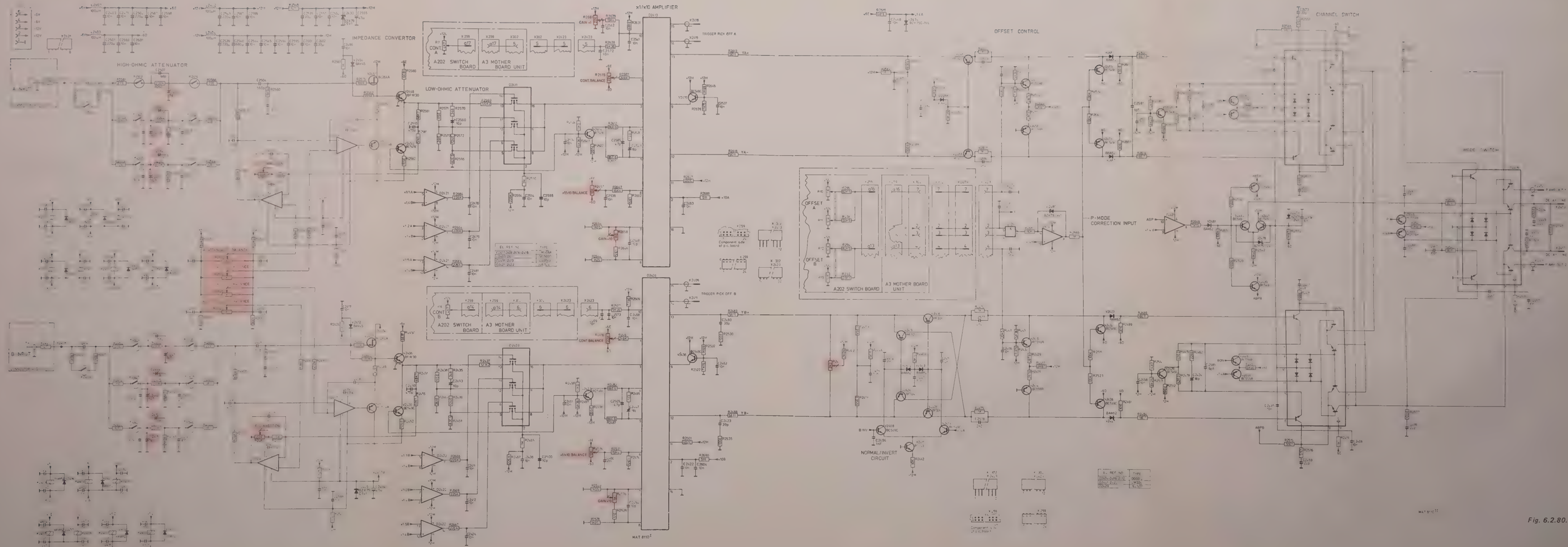
x1/x10 AMPLIFIER
IMPEDANCE CONVERTOR
HIGH-OHMIC ATTENUATOR
LOW-OHMIC ATTENUATOR
A202 SWITCH BOARD
A3 MOTHER BOARD UNIT
TRIGGER PICK OFF A
TRIGGER PICK OFF B
OFFSET CONTROL
OFFSET A
OFFSET B
P-MODE CORRECTION INPUT
CHANNEL SWITCH
MODE SWITCH
NORMAL/INVERT CIRCUIT
A INPUT
B INPUT

Fig. 6.2.80.

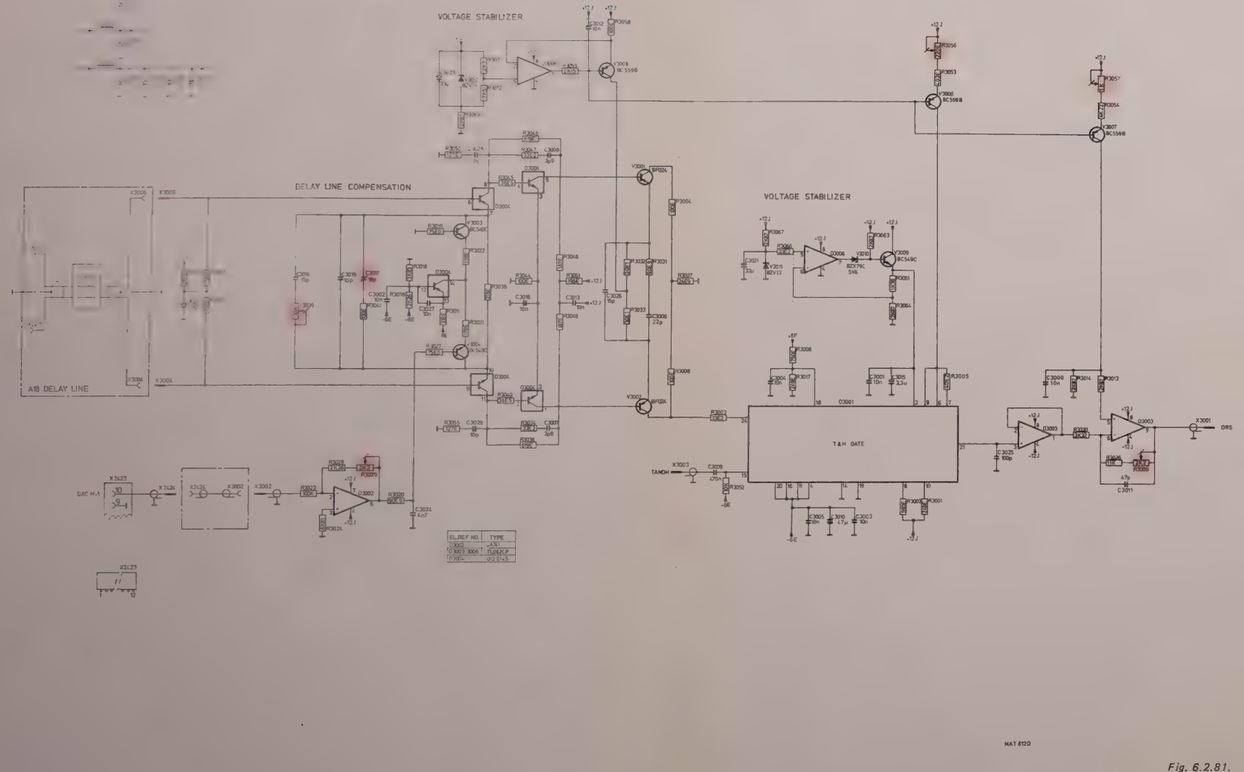

Fig. 6.2.81.

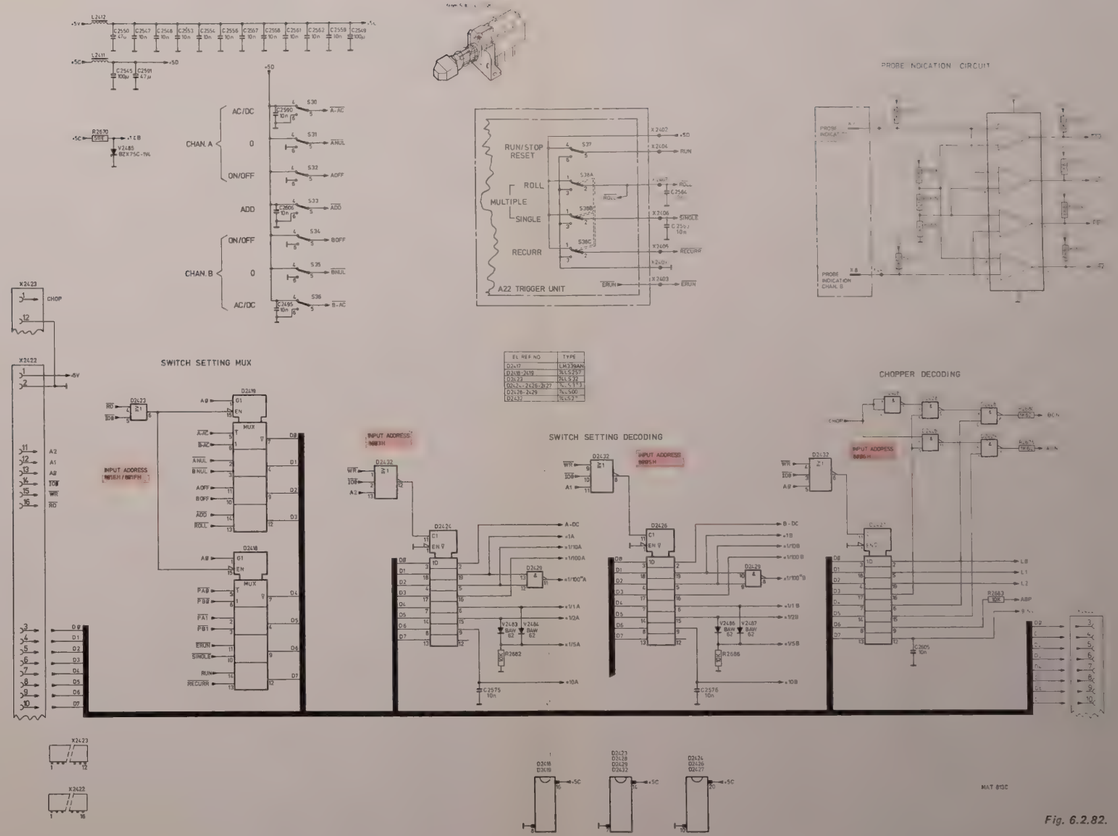

Fig. 6.2.82.

6.2.22. Trigger unit A22

The trigger unit comprises the following circuits:

- Trigger source switching circuit
- AC-DC coupling
- Peak-peak detector
- Level circuit
- Slope circuit
- TV circuit
- Pulse stretcher
- Time-base slow circuit
- Sampling circuit

6.2.22.1. Trigger source switching circuit

The trigger source switching circuit serves to detect the selected trigger source, the various possibilities being:

- channel A
- channel B
- LINE
- EXTERN
- EXTERN ÷ 10

With no pushbutton depressed, channel A is automatically chosen. Transistor V2723 provides this facility.
If all pushbuttons are released, the base of V2723 is connected to zero, which causes the transistor to block.
In turn, transistors V2746 and V2747 are blocked and therefore the signal of channel A is enabled.
In all other positions of the switches, except for CHAN A switch, V2723 is conductive and the channel A signal flows via V2746 and V2747 to the –6 V supply line, i.e. it is blocked.

In single or recurrent operation, two modes of external triggering are possible: EXT and EXT ÷ 10.
In the EXT ÷ 10 mode, the input signal is attenuated by a factor of 10 and applied to the amplifier. The h.f. path of the amplifier is via C2708 and V2701 to V2702; the l.f. path is a.c.-coupled via C2719 and D2708 to V2702, and d.c.-coupled via D2709 (13, 14) and D2708 to V2702.

In the roll-mode the function of the external input is a RUN/STOP action at TTL-level. This is a software OR-function together with the position of the R/S switch. A high level at the input is applied to V2727 via D2709 and D2708, V2702, V2707. This causes the ERUN signal to go high, which then starts the ROLL-mode via the software program if the R/S switch is at STOP.

6.2.22.2. AC-DC coupling

The trigger signal is routed to V2724 and V2729 via the AC-DC coupling circuit.
If the d.c. signal is high, the reed relay K2701 switches off and the signal is applied to the bases of V2724 and V2729 via R2789, R2788 and R2792, R2791 respectively. If the d.c. signal is low, the reed relay is energised and the d.c. component in the trigger signal is filtered out, the a.c. component flowing through C2737 and C2743. The signal is applied via an amplifier stage to the input of the slope circuit and the input of the peak-peak detector.

6.2.22.3. Peak-peak detector

A peak-to-peak detector is introduced to enable the possibility of levelling between the positive and negative peaks of the signal in the AUTO mode.
The positive peak flows via the base-emitter diode of D2703 (6, 7, 8), to charge electrolytic capacitor C2709. The current required to drive D2703 (9, 10, 11) is obtained from D2704 (5, 6, 7). The output of this amplifier is the d.c. level proportional to the positive peak.
The negative peak flows via the emitter-collector diode of D2703 (1, 2, 3) to charge C2711. This peak voltage is amplified by D2704 (1, 2, 3) to give an output d.c. level proportional to the negative peak.

6.2.22.4. Level circuit

The level potentiometer is connected to the outputs of a multiplexer D2701.
Depending on the signals TV and OH, the level potentiometer is connected to:

MODE	D2701 OUTPUTS 13	3	TV	OH
AUTO	postop	negtop	0	0
DCor AC	d.c.	d.c.	0	1
TV +	postop	postop	1	0
TV −	negtop	negtop	1	1

6.2.22.5. Slope circuit

The trigger signal is applied to the differential amplifier in D2711.
The output of the level circuit is applied to the other input.
Depending on the position of the slope switch, either V2732 or V2751 conducts, which causes the positive or negative signal to be connected to the outputs of D2711. The trigger signal is applied via an electronic switch V2761 and its associated components to ECL-Schmitt trigger D2907 (2, 3, 4, 5).

6.2.22.6. TV circuit

The outputs 12 and 13 of D2711 are applied to the video clipper consisting of V2717 and its components.
The TV trigger signal is now applied to two re-triggerable monostable one-shots (D2702) in series, with different pulse times. The output of the first one-shot is applied to the clock input of D-flip-flop D2707. This flip-flop is enabled by the TV signal. At output 9 of D2707 a 50 Hz field pulse is available. To obtain frame pulses, the inverting output 8 of D2707 is applied to clock input 3. At the D input 2, the output of the second one-shot is applied. The frame pulse now appears at the inverting output 5 of D2707.
Normal triggering is now inhibited because of the TV signal applied to the electronic switch V2761, which causes the voltage at X2708 to go low.

6.2.22.7. Pulse stretcher

The trigger pulse is applied via the ECL-Schmitt trigger to the clock input of the dual ECL D-flip-flop D2904.

This flip-flop in combination with two Schmitt trigger circuits D2907 (9, 10, 6, 7), D2907 (12, 13, 14, 15) form the pulse stretcher.
The principle is shown in the following diagram.

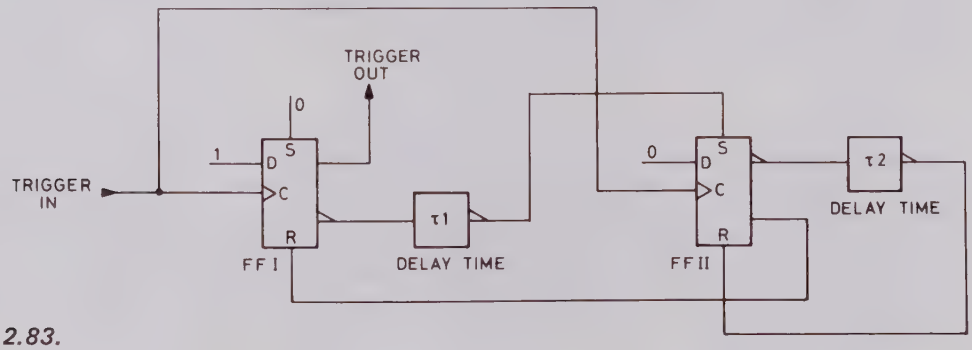

Fig. 6.2.83.

On receipt of a trigger pulse at the clock input of FFI, its inverted output goes low. After time t_1, this output is applied as a logic high signal, which sets FFII. Consequently, its inverted output goes low and the non-inverting output goes high. This results in a reset of FFI. After t_2, FFII is reset and, as a result, FFI is enabled.

Times t_1 and t_2 are chosen so that the pulse stretcher acts as a pulse-shaper at frequencies up to 2 kHz, as a divide-by-two circuit from 2 kHz to 10 kHz, and as a divider by n for frequencies above 10 kHz.

6.2.22.8. Time-base slow circuit

The output of the pulse stretcher is converted to TTL-level by the two converters D2906. The upper converter produces the TRIST signal which is applied to the delayed trigger unit A13. In the sampling mode, the lower converter can feed the trigger signal to the sampling system.

In the Direct and Roll-modes, the system is operated by the TBS signal. This signal is fed via inverter D2911 (5, 6) and NAND-gate D2912 (11, 12, 13) to the clock input 11 of D-flip-flop D2909. At the inverted output 8, a low level is clocked, which is the STOP signal. This STOP signal is applied to multiplexer D2908 and via the inverted output and diode V2919 to the wired-OR gate (D2911-13). Pin 12 of D2911 goes low and via the upper NAND-gate of D2902 a Track and Hold (TANDH) pulse is generated.

The lower NAND-gate of D2902 is controlled by the TANDH pulse via D2903 (13, 11) and inverter D2911 (1, 2) and generates a HONCONDRS pulse. At the same moment, a TANDH pulse is taken over by a high level at output 8 of D2903.

The HOCONDRS pulse goes high after 3.6 μs caused by the RC combination R2928 and C2918, C2919. After approximately 0.4 μs, output 8 of D2903 goes low and therefore the HOCONDRS pulse again becomes low.

6.2.22.9. The sampling circuit

If the oscilloscope is in the sampling mode, the output of the pulse stretcher is applied to the clock input 11 of D2909. This flip-flop is enabled by a high level on reset input 13, and its inverted output blocks transistors V2916 and V2913.
Sawtooth capacitor C2923 starts charging with a current derived from the current source V2922. The current that feeds the fast ramp sawtooth generator is determined by the settings of the time-base switch. These settings are decoded by the microprocessor system and applied to a FET-switch array D2401 and FET V2401, via D2402. The following table shows the relationship between the time-base settings and the current-source control FETs.

	D2431					D2431		
	4	5	11	6	7	L2	L1	LØ
5 ns/div	1	1	0	1	1	1	1	0
10ns/div	1	0	1	1	1	0	0	1
20ns/div	1	1	1	0	1	1	0	0
50ns/div	1	1	1	1	0	1	0	1
.1μs/div	0	1	1	1	1	0	0	0

One control line is always low. This means that one of the resistors R2421, R2443, R2446, R2454 and R2458 is switched in parallel with the current-determining resistor R2434. The value of the resistors is determined so that in the 5ns/cm position the highest current is obtained.
The fast ramp sawtooth voltage is applied to the positive input of comparator D2902 (11, 12). To the negative input, a preset voltage built-up from DACSTAIR and DACDEL is applied. If the last ramp reaches the potential of the preset voltage, the comparator output goes low and the triple-NAND gate goes high for 4 μs (described under time-base slow).
The sawtooth voltage is blocked and the capacitor is discharged by a reset pulse derived from the TANDH pulse at D2909-13, so output 8 goes high.
The flip-flop is enabled to start a new sawtooth ramp if the TANDH signal is low and TRACK is high.
The DACSTAIR signal is generated at the ACL unit and is divided into 256 steps, each of 40 mV. The DACDEL signal is generated on the delayed time-base unit and is divided into 200 steps, each of 40 mV. This means that each division delay corresponds to two steps (i.e. 80 mV). The resistor network R2910, R2913, R2914 is chosen so that 256 steps of DACSTAIR generate the same potential as 20 steps of DACDEL at input 6 of D2901.
If no sampling mode is chosen, the TANDH signal is not generated by means of the sawtooth generator and the comparator, but via the system described under time-base slow. This is effected by presetting the negative input 11 of the comparator to a high voltage via D2901.

INCOMING SIGNAL	OUTGOING SIGNAL	GENERATED ON UNIT	USED ON UNIT	DESCRIPTION
	AUTO TB	A22	A13	Auto signal from AUTO switch
DAC DEL		A13		Output signal of DAC delay
DAC STAIR		A9		Output signal of DAC STAIR
	ERUN	A22	A21	Enable run signal
FRUN		A13		Freerun signal
	HOCONDRS	A22	A9	Hold and convert signal in D-R and S-mode
LINE		A15		Signal for mains triggering
S		A12		S-mode signal
	TANDH	A22	A21	Track and hold signal
TBS		A12		Time-base slow
TRACK		A9		Track command for S/H circuit
	TRIST	A22	A13	Trigger signal for strecher
+5V		A15		
−5.2V		A15		
+6V		A15		
−6V		A15		
+12V		A15		
−12V		A15		
+40V		A15		
		A15		

TEST POINTS	
X2700	External trigger
X2707	TRIGGER SIGNAL
X2708	TRIG.
X2905	HOCONDRS

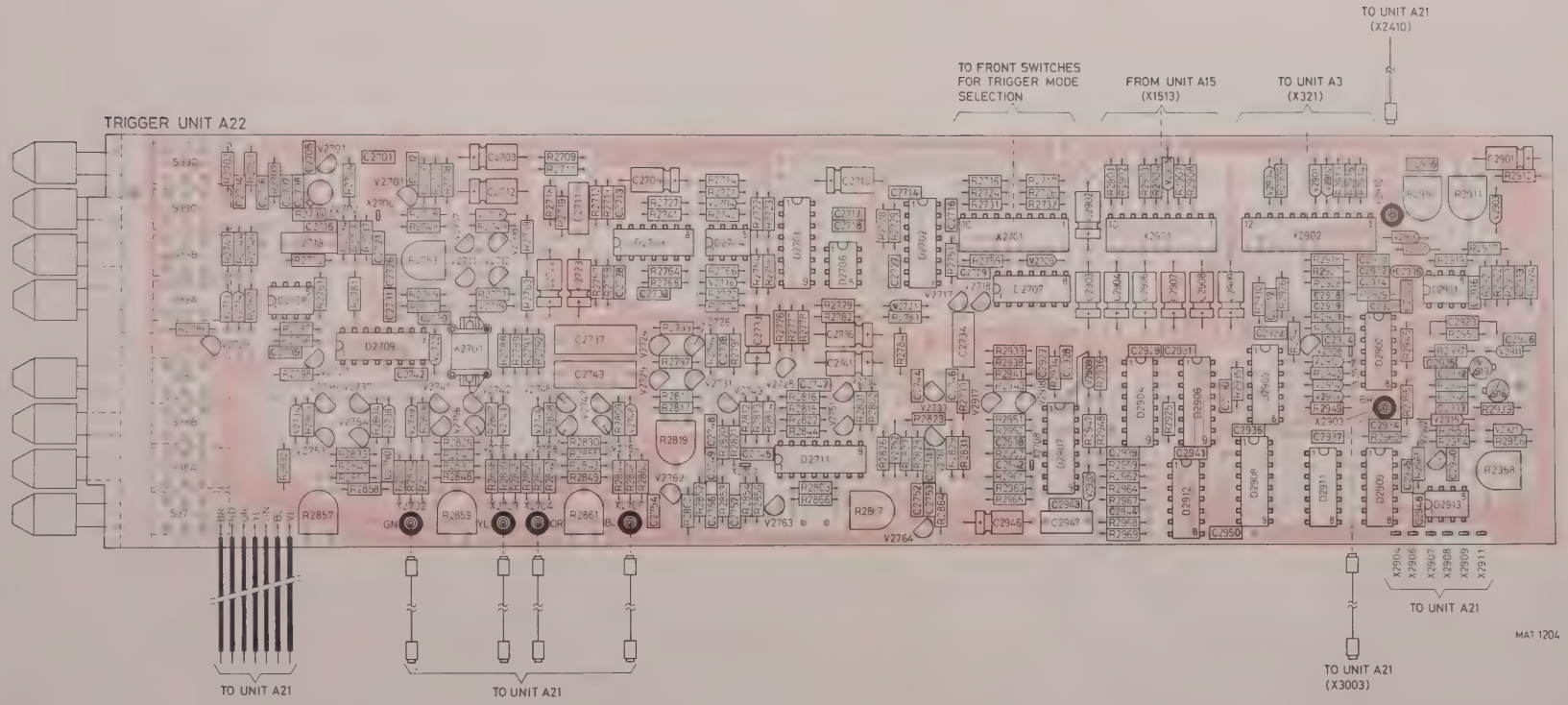
TRIGGER UNIT A22
TO FRONT SWITCHES FOR TRIGGER MODE SELECTION
FROM UNIT A15 (X1513)
TO UNIT A3 (X321)
TO UNIT A21 (X2410)
TO UNIT A21
TO UNIT A21
TO UNIT A21 (X3003)
TO UNIT A21
MAT 1204

Fig. 6.2.84.

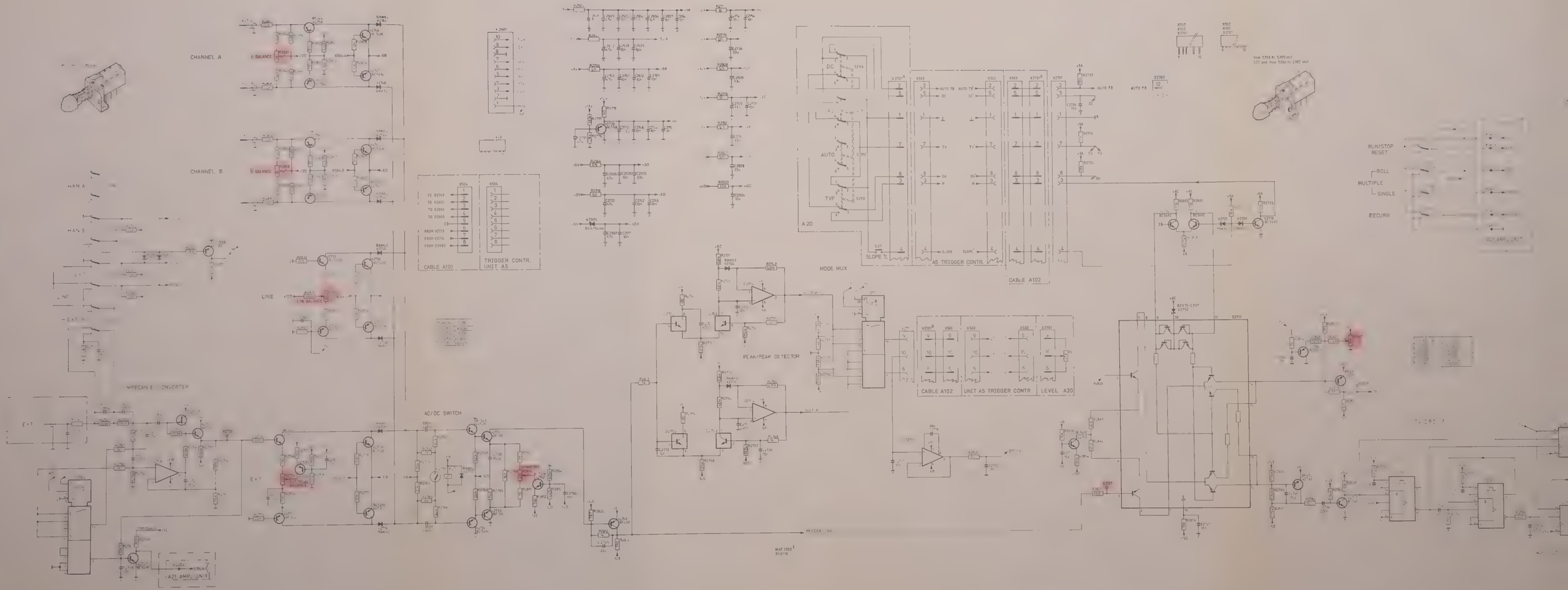

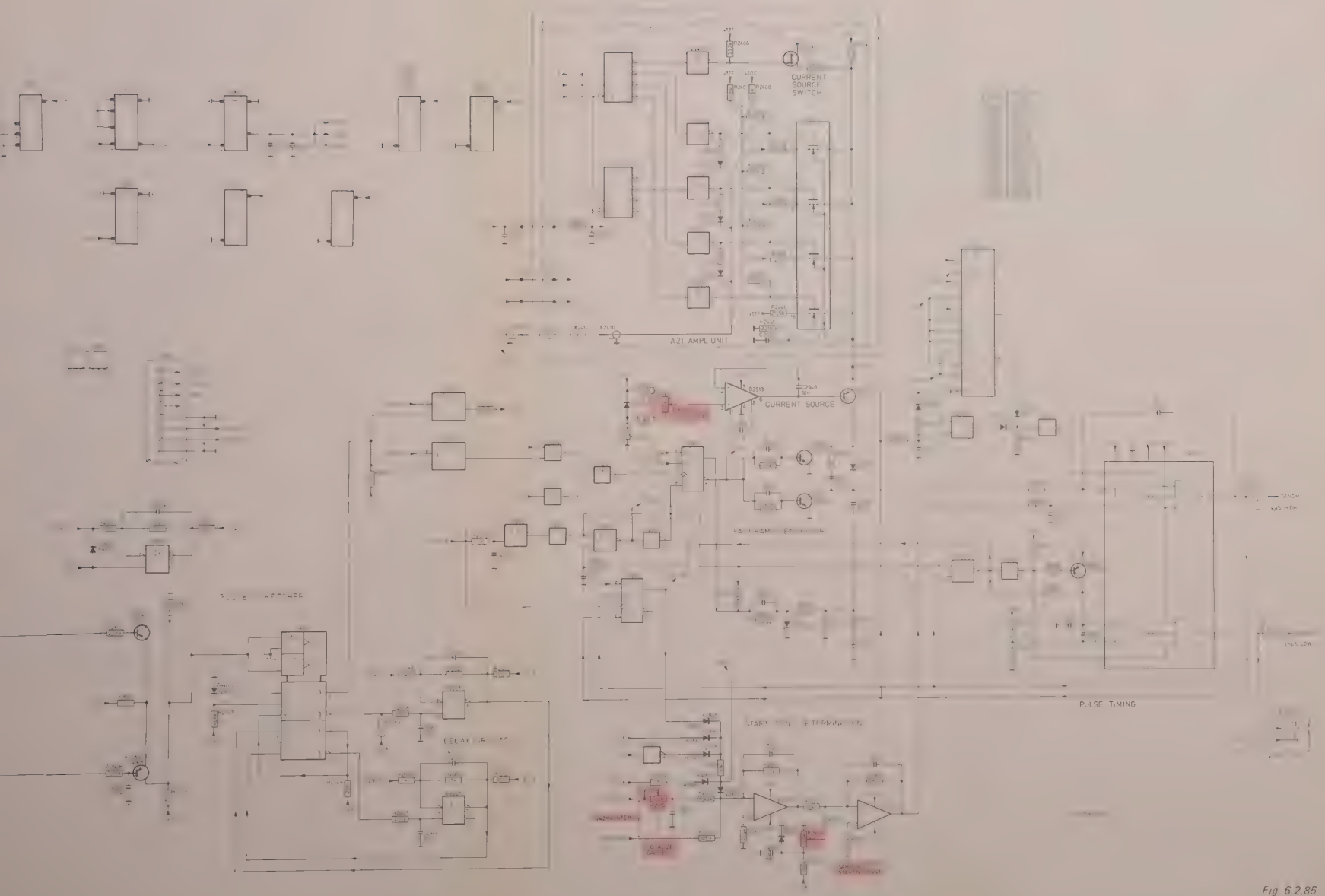
CURRENT SOURCE SWITCH
A21 AMPL UNIT
CURRENT SOURCE
PULSE TIMING

Fig. 6.2.85

6.2.23. EHT unit A23

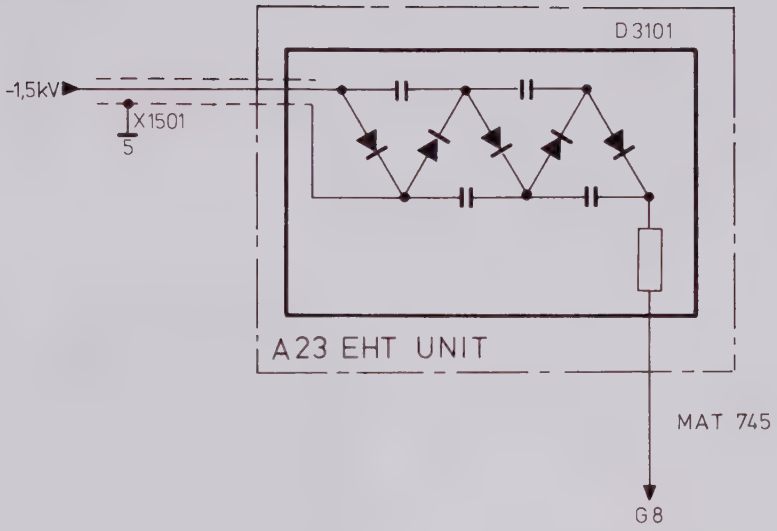

Fig. 6.2.86

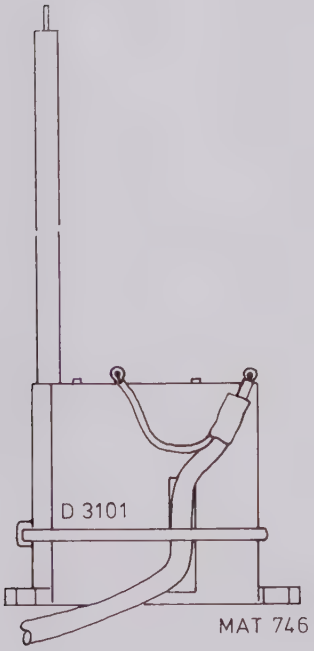

Fig. 6.2.87

6.2.24. Clock-pulse generator. Driver unit A34.

The four clock-pulse signals P2, A2, P1 and A1 needed to shift the signal samples through the P2CCD, are produced by clock-pulse generator D1001 in combination with the LC filters on unit A11, which are terminated by 50 Ω resistors to minimise reflections. One of these double-T filters is connected between the output pins 7 and 6, and the other between the output pins 9 and 10 of clock-pulse generator D1001. The resulting four square-wave clock-pulse signals have a high level of +11,4 V and a low level of +2 V as shown below.

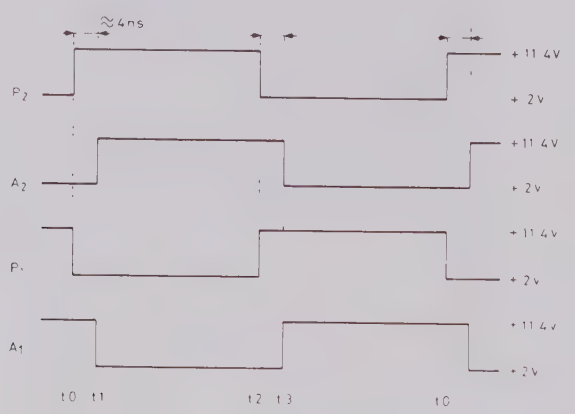

Fig. 6.2.44.

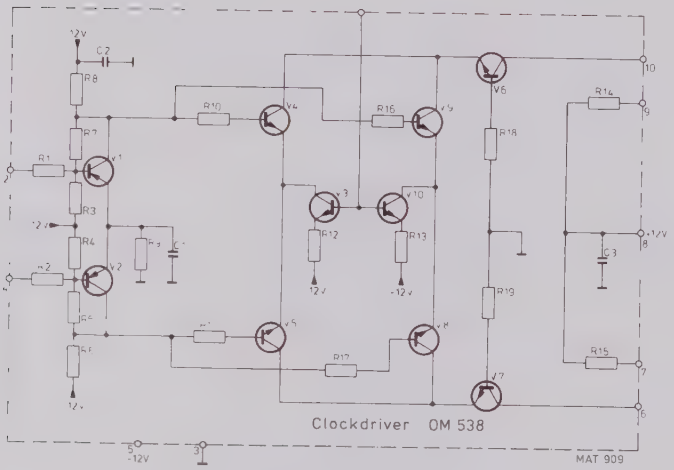

Fig. 6.2.44a

Signals P2/A2 are 180° phase-shifted with P1/A1. The delay between the filter sections is approximately 4nsec.

For correct sampling of the input signal by the P2CCD, it is necessary that the low level (+2V) of the clock signals P2 and P1 remains constant. To achieve this, the clock-signals P2 and P1 are measured on unit 10, which results in a feedback signal CLF of approximately +3,6V (clock-pulse amplitude feedback signal).

This voltage is applied to the base of transistor V3403 via low-pass filter R3436/C3418. A stable reference voltage of +3,6V is applied to the base of transistor V3404. In this way, variations of the low level (+2V) of the clock-signals P2 and P1 result in a variation of the signal level on the collector of transistor V3404. This variation is then fed back via emitter-follower V3401 to a current source pin 1 of the clock-pulse generator D3401.
The clock-pulse generator is driven by a signal CLKDR from pin 2 of flip-flop D3209 and routed via D3211 as signals P2CCD clock and $\overline{\text{P2CCD}}$ clock to unit A34.

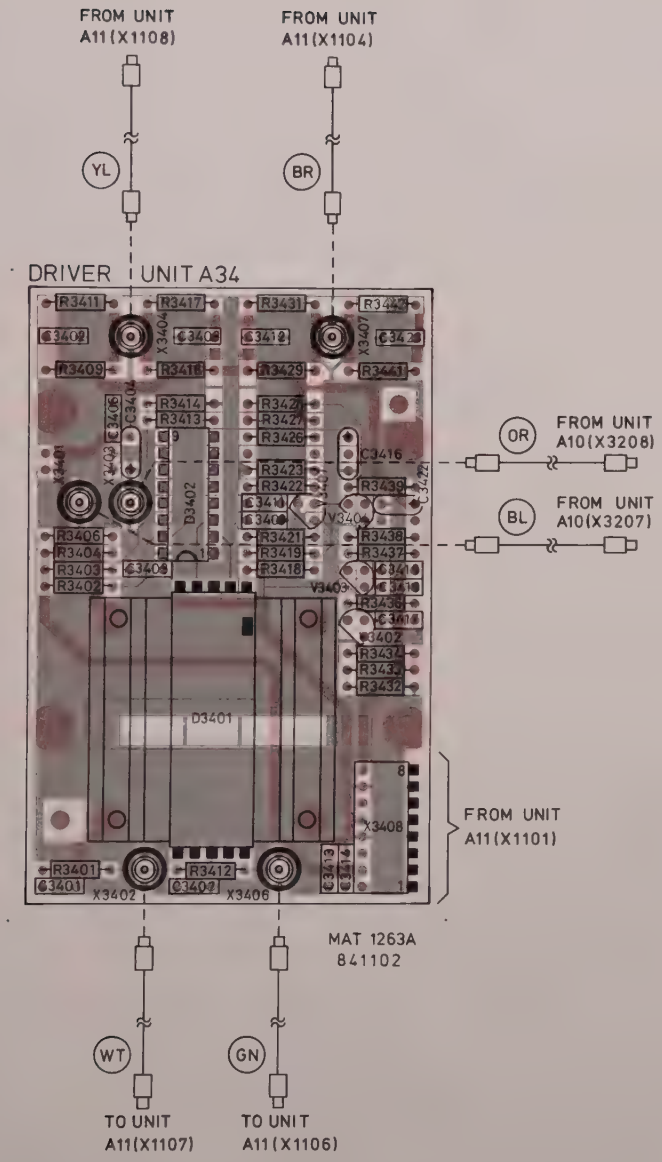

Fig. 6.2.88.

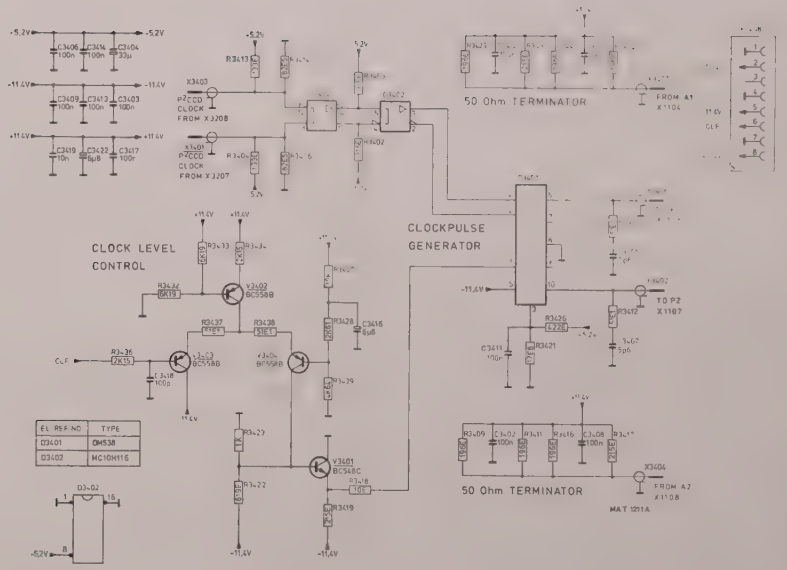

A34 DRIVER UNIT

Fig. 6.2.89.

7. DISMANTLING THE INSTRUMENT

7.1. WARNINGS

WARNING: **The opening of covers or removal of parts, except those to which access can be gained by hand, is likely to expose live parts, and also accessible terminals may be live.**
The instrument shall be disconnected from all voltage sources before any adjustment, replacement or maintenance and repair during which the instrument will be opened.
If afterwards any adjustment, maintenance or repair of the opened instrument under voltage is inevitable, it shall be carried out only by a qualified person who is aware of the hazard involved.
Bear in mind that capacitors inside the instrument may still be charged even if the instrument has been separated from all voltage sources.

ATTENTION: This section provides the dismantling procedures required for the removal of components during repair operations. All circuit boards removed from the oscilloscope should be adequately protected against damage, and all normal precautions regarding the use of tools must be observed. During dismantling procedures, a careful note must be made of all disconnected leads that they may be reconnected to their correct terminals during assembly. Damage may result if the instrument is switched on when a circuit board has been removed, or if a circuit board is removed within one minute after switching off the instrument.

WARNING: **The E.H.T. cable is unbreakably connected to the E.H.T. unit (disconnection at C.R.T.).**
When the E.H.T. cable to the post-acceleration anode of the C.R.T. is disconnected at the C.R.T. unit end, the E.H.T. cable must be discharged immediately by shortening them to earth.

7.2. REMOVING THE COVERS

To remove the instrument covers, proceed as follows:

– Both upper and lower cabinet plates can be removed after slackening the four quick-release fasteners at the corners of each plate. To prevent the fasteners coming apart, do not slacken more than two turns.

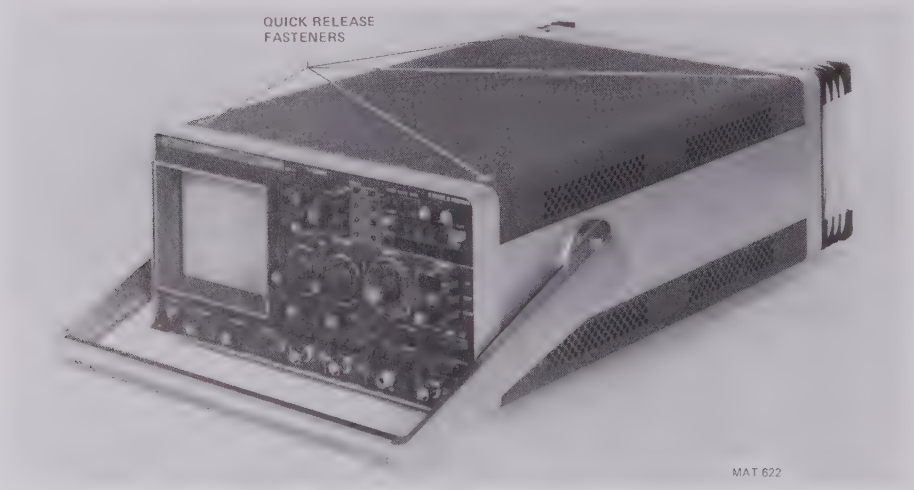

Fig. 7.2.1. Removing the instrument covers.

7.3. ACCESS TO PARTS FOR CHECKING AND ADJUSTING PROCEDURE

Adjusting elements are accessible after removing the instrument covers.
Only for measurements and adjustments on the AC POWER unit A16 and DC POWER unit A15 the rear panel has to be removed.

Remove the six screws that secure the rear panel to the instrument

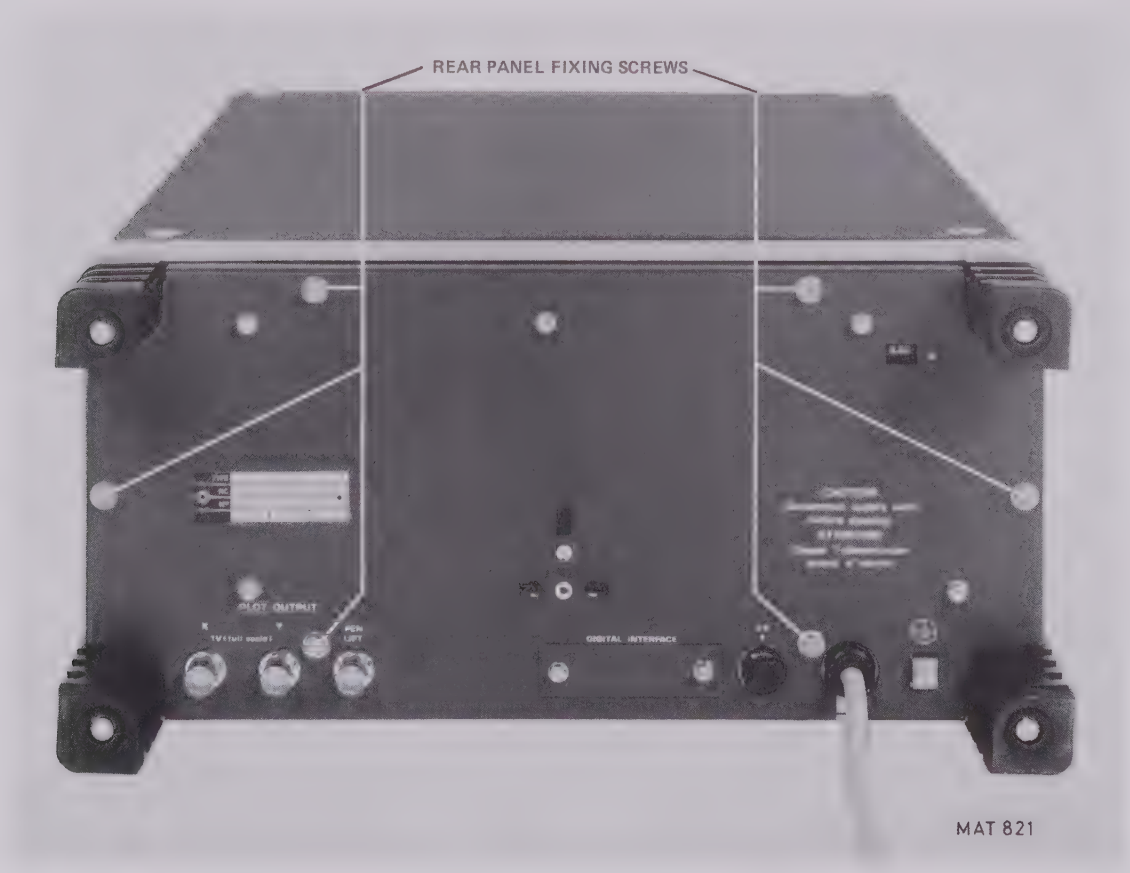

Fig. 7.2.2.

Unit A16 which is mounted on the rear panel can be placed outside the instrument by pulling the rear panel.

For better access to unit A15 both the upper and lower screening plates can be removed.

8. CHECKING AND ADJUSTING

Before starting with the CHECKING and ADJUSTING procedure check the instruments specification by means of the PERFORMANCE CHECK procedure on page 8-29.

WARNING: The opening of covers or removal of parts, except those to which access can be gained by hand, is likely to expose live parts, and also accessible terminals may be live.
The instrument shall be disconnected from all voltage sources before any adjustment, replacement or maintenance and repair during which the instrument will be opened.
If afterwards any adjustment, maintenance or repair of the opened instrument under voltage is inevitable, it shall be carried out only by a qualified person who is aware of the hazard involved.
Bear in mind that capacitors inside the instrument may still be charged even if the instrument has been separated from all voltage sources.

8.1. GENERAL INFORMATION

The following information provides the complete checking and adjusting procedure for the oscilloscope. As various control functions are interdependent, a certain order of adjustment is often necessary.
The procedure is, therefore, presented in a sequence which is best suited to this order, cross-reference being made to any circuit which may affect a particular adjustment.
Before any check or adjustment, the instrument must attain its normal operating temperature.

- Where possible, instrument performance is checked before an adjustment is made.
- Warming-up time under average conditions is 30 minutes.
- All limits and tolerances given in this section are calibration guides and should not be interpreted as instrument specifications unless they are also published in chapter 1.2. characteristics.
- Tolerances given are for the instrument under test and do not include test equipment error.
- The most accurate display adjustments are made with a stable, well-focused, low-intensity display. Unless otherwise noted, adjust the Intensity, Astigmatism, Focus and Trigger Level controls as needed.

8.1.1. Recommended test equipment

Type of instrument	*Specifications*	*Used for*	*Example of recommended instrument*
1. Constant amplitude sine-wave generator	Freq. 200 kHz ... 60 MHz Constant amplitude of 12 mVp-p ... 1.2 Vp-p	Bandwidth check of vertical channels and triggering	Tektronix SG 503 + SG 504
2. Time marker generator	Repetition rate 0.5 s ... 20 ns	Checking and adjusting of sweep rates	Tektronix TG 501
3. Square-wave calibration generator	Rise time ⩽ 200 ns Voltage 10 mV up to (for preference) 30 V Duty cycle 50 % Rise time ⩽ 1 nsec.	Checking and adjusting of square-wave response of vertical channels and triggering	Generator with additional attenuator unit. Partly PG506
4. L.F. sine-wave/square-wave generator	Sine-wave: 1 Hz ... 1 MHz/0 ... 30 V Square-wave: 1 Hz ... 1 MHz/0 ... 30 V Rise time ⩽ 100 ns	Checking the trigger sensitivity Checking and adjusting square-wave response of for instance attenuator unit	PM 5129
5. Cables, T-piece, terminations for the generators	General Radio types for fast rise-time square-wave and high frequency sine-wave. BNC-types for other applications.	See points 1 and 3 See points 2 and 4.	
6. Dummy probe 2 : 1	1 MΩ ± 0.1 % // 25 pF	Adjustment of input capacitance.	
7. Trimming tool kit		Adjustments	PHILIPS 800 NTX - 4822 310 50015
8. Variable mains transformer	Well-insulated output voltage 90 ... 264 Va.c.	Checking influence of mains voltage variations and adjustment of power supply.	PHILIPS ord. number 2422 529 00005
9. Moving-iron meter		Checking the power consumption of the instrument.	
10. Oscilloscope	The bandwidth must be the same or higher than the bandwidth of the instrument under test.	Various measurements.	PM 3262 PHILIPS
11. Digital multimeter	Wide voltage, current and resistance ranges. Required accuracy 0.1 %.	Checking the instrument under test.	PHILIPS PM 2527

8.1.2. Preliminary settings

- No input signals connected.
- All pushbuttons released and all switches in the CAL position.

A trace will now appear within the upper two divisions of the screen.

Clear all the four memories ACCU - STO1 - STO2 and STO3.

8.2. SURVEY OF ADJUSTING ELEMENTS AND AUXILIARY EQUIPMENT

ADJUSTMENT	ADJUSTING ELEMENT + UNIT	ADJUSTING RESULT OR CHECK RESULT	RECOMMENDED INPUT SIGNALS	EXAMPLE OF MEASURING INSTRUMENT	CHAPTER
POWER SUPPLY					8.3.1.
Power consumption	–	Current consumption ⩽ 300 mA at 220 V local mains	–	–	8.3.1.
+12 V supply voltage	R1646 (A16)	+12.6 V + 1 %	–	PM 2517 or PM 2527	8.3.1.
+5 V supply voltage	–	+5 V ± 0.25 V	–	PM 2517 or PM 2527	8.3.1.
+12 V supply voltage	–	Vary mains voltage between 200 V and 265 V. Check +12 V output (+ or – 60 mV).	–	PM 2517 or PM 2527	8.3.1.
Oscillator frequency	R1647 – (A16)	Set mains voltage to 180 V. Check +12 V output for ripple ⩽ 10 mV.	–	PM 3262	8.3.1.
C.R.T. CIRCUIT					8.3.2.
Cathode voltage	R1591 – (A15)	–1.5 V on test point X1502	–	PM 2517 or PM 2527	8.3.2.
Intensity	R1589 – (A15)	Trace just not visible	–	–	8.3.2.
Focus and Astigmatism	R1588 – (A15)	in its mid position	Sine-wave signal of 240 mVp-p – 2 kHz to X4	PM 5129	8.3.2.
	R1506 – (A15)	Sharp and well-defined trace	–	–	8.3.2.
	R1587 – (A15)	Sharp and well-defined trace	–	–	8.3.2.
Trace rotation	R16 – (front)	Horizontal trace	–	–	8.3.2.
PRE ADJUSTMENT P²CCD CIRCUIT					8.3.3.
Pre-settings	R3201 – (A10)	Set these potentiometers as indicated on unit A10		PM 2517 or PM 2527	8.3.3.
	R3202 – (A10)			PM 2517 or PM 2527	8.3.3.
	R3203 – (A10)			PM 2517 or PM 2527	8.3.3.
	R3204 – (A10)			PM 2517 or PM 2527	8.3.3.
	R3206 – (A10)			PM 2517 or PM 2527	8.3.3.
	R3207 – (A10)			PM 2517 or PM 2527	8.3.3.
	R3208 – (A10)			PM 2517 or PM 2527	8.3.3.
	R3209 – (A10)			PM 2517 or PM 2527	8.3.3.
	R3211 – (A10)			PM 2517 or PM 2527	8.3.3
	R3219 – (A10)			PM 2517 or PM 2527	8.3.3.
	R3221 – (A10)			PM 2517 or PM 2527	8.3.3.
	R3222 – (A10)			PM 2517 or PM 2527	8.3.3.
	R3226 – (A10)			PM 2517 or PM 2527	8.3.3.
	R3273 – (A10)			PM 2517 or PM 2527	8.3.3.
	R1106 – (A11)			PM 2517 or PM 2527	8.3.3.
	R1107 – (A10)	Minimum trace jump when switching 0.2 ms/div to 0.5 ms/div	–	–	8.3.3.
	R1108 – (A10)				
	L1101 – (A10)				
	L1102 – (A11)				
	L1104 – (A11)				
	L1106 – (A11)				
	R3057 – (A21)				
BALANCE ADJUSTMENTS					8.3.4.
Vertical amplifier balances					8.3.4.1.
0-DC balance	CH.A – R2642 – (A21) CH.B – R2526 – (A21)	Minimum trace jump when switching 0-DC	–	–	8.3.4.1.
Attenuator balance	CH.A R2643 – (A21) CH.B – R2527 – (A21)	Minimum trace jump when switching between 10 mV/ div – 20 mV/div – 50 mV/div	–	–	8.3.4.1.
X1/X10 balance	CH.A – R2657 – (A21) CH.B – R2534 – (A21)	Minimum trace jump when switching between 50 mV/div and 0.1 V/div	–	–	8.3.4.1.
Continue balance	CH.A – R2576 – (A21) Ch.B – R2416 – (A21)	Minimum trace shift when turning the continuous control	–	–	8.3.4.1.
Normal/Invert balance	CH.B – R2411 – (A21)	Minimum trace jump when switching Normal-Invert	–	–	8.3.4.1.
Trigger symmetry	R2819 – (A22)	Voltage on test point X2707 = –1V	–	PM 2517 or PM 2527	8.3.4.2.
Trigger balances AC-DC					8.3.4.3.
External	R2753 – (A22)	No movement of trigger point when switching AC-DC	Sine-wave signal of 1,2 V p.p 2 kHz	PM 5129	8.3.4.3.
A balance	R2861 – (A22)	No movement of trigger point when switching AC-DC	Sine-wave signal of 1,2 V p.p 2 kHz	PM 5129	8.3.4.3.
B balance	R2859 – (A22)	No movement of trigger point when switching AC-DC	Sine-wave signal of 1,2 V p.p 2 kHz	PM 5129	8.3.4.3.
LINE balance	R2857 – (A22)	No movement of trigger point when switching AC-DC	Sine-wave signal of 1,2 V p.p 2 kHz	PM 5129	8.3.4.3.
Trigger amplifier balance	R2867 – (A22)	Trigger point in middle of signal amplitude	Sine-wave signal of 1,2 V p.p 2kHz	PM 5129	8.3.4.4.

ADJUSTMENT	ADJUSTING ELEMENT + UNIT	ADJUSTING RESULT OR CHECK RESULT	RECOMMENDED INPUT SIGNALS	EXAMPLE OF MEASURING INSTRUMENT	CHAPTER
FINAL AMPLIFIER ADJUSTMENTS					8.3.5.
Vertical trace height	R2008 – (A20)	Display is blinking at + 4 divisions	Sine-wave signal to X3	PM 5129	8.3.5.
Display positions ACCU-STO1-STO2-STO3	R2009 – (A20)	Distance of two divisions between the traces	–	–	8.3.5.
Invert registers	–	ST01 – ST02 – ST03 are inverted	Sine-wave signal to X3	PM 5129	8.3.5.
Horizontal trace length	R2011 – (A20)	Horizontal trace length of 10 divisions	–	–	8.3.5.
Dot join adjustments	R2019 – (A20)	Equal vertical dot join faults on positive and negative going edge of the signal	Sine-wave signal of 10 divisions 2 kHz	PM 5129	8.3.5.
	R2018 – (A20)	Eliminated dot join faults	Sine-wave signal of 10 divisions 2 kHz	PM 5129	8.3.5.
	R2072 – (A20)	Dots on the screen connected with each other	Sine-wave signal of 10 divisions 2 kHz	PM 5129	8.3.5.
	R2039 – (A20)	Minimum cross-talk between the channels	Sine-wave signal of 10 divisions 2 kHz	PM 5129	8.3.5.
CALibration voltage	R2017 – (A20)	3 V ± 0.7 % – 2.5 kHz	Oscilloscope and digital multimeter	PM 3262 – PM 2527	8.3.5.
VERTICAL CHANNELS					8.3.6.
Vertical amplifier sensitivity adjustments					8.3.6.1.
Channel B gain x1	R3029 – (A21)	Trace height of 6 DIV	Square-wave signal of 240 mVp-p – 2 kHz to X4	PM 5129	8.3.6.1.
Channel A gain x1	R2661 – (A21)	Trace height of 6 DIV	Square-wave signal of 240 mVp-p – 2 kHz to X3	PM 5129	8.3.6.1.
Channel A gain x10	R2658 – (A21)	Trace height of 6 DIV	Square-wave signal of 24 mVp-p – 2 kHz to X3	PM 5129	8.3.6.1.
Channel B gain x10	R2536 – (A21)	Trace height of 6 DIV	Square-wave signal of 24 mVp-p – 2 kHz to X4	PM 5129	8.3.6.1.
Channel A L.F. corr.	R2611 – (A21)	Straight pulse top	Square-wave signal of 240 mVp-p – 100 Hz to X3	PM 5129	8.3.6.1.
Channel B L.F. corr.	R2481 – (A21)	Straight pulse top	Square-wave signal of 240 mVp-p – 100 Hz to X4	PM 5129	8.3.6.1.
AC – DC channel A	–	Pulse top difference > 0,5 div	Square-wave signal of 240 mVp-p – 100 Hz	PM 5129	8.3.6.1.
AC – DC channel B	–	Pulse top difference > 0,5 div.		PM 5129	8.3.6.1.
Sampling loop gain	R3009 – (A21)	Straight pulse top	Square-wave signal of 240 mV p.p – 2 kHz to X3	PM 5129	8.3.6.1.
	R 3056 – (A21)	Pulse variations are symmetrical	Square-wave signal of 240 mVp-p – 2 kHz to X3	PM 5129	8.3.6.1.
	R3057 – (A21)	Line is in middle of the screen	–	–	8.3.6.1.
IF NECESSARY PRE-ADJUST P²CCD					
Input attenuators		Straight pulse top. Pulse top errors + or –4 % maximum	Square-wave signal with a rise time ⩽ 100 ns	PM 5129 2 : 1 Dummy probe 1 MHz // 25 pF	8.3.6.2.
	CH.A – CH.B Switch	AMPL/DIV Trace-height	Amplitude and frequency		
	C2503 (C2427)	20 mV/div 6 div ± 4 %	24 mV – 2 kHz		
	C dummy	20 mV/div 6 div ± 4 %	48 mV – 10 kHz (via dummy)		
		0.2 V/div 6 div ± 4 %	240 mV – 2 kHz		
	–	0.2 V/div 6 div ± 4 %	480 mV – 10 kHz (via dummy)		
	C2521 (C2444)	2 V/div 6 div ± 4 %	2,4 V – 2 kHz		
	C2518 (C2442)	2 V/div 6 div ± 4 %	4.8 V – 10 kHz (via dummy)		
	C2484 (C2416)	20 V/div 6 div ± 4 %	24 V – 2 kHz		
	C2477 (C2409)	20 V/div 6 div ± 4 %	48 V – 10 kHz (via dummy)		

ADJUSTMENT	ADJUSTING ELEMENT + UNIT	ADJUSTING RESULT OR CHECK RESULT	RECOMMENDED INPUT SIGNALS	EXAMPLE OF MEASURING INSTRUMENT	CHAPTER
Square-wave response CH.A (CH.B) x1	R3039 (A21) C3017 - (A21)	Pulse top errors may not exceed 1 subdivision	Square-wave signal of 1MHz - rise time ≤ 1 ns to X3.	–	8.3.6.3.
	C2424 C2447 C2429 C2523	.. ..	.. ..		.. ..
Ch.A. square-wave response in ADD-mode		No change in square wave response when operating the ADD push button	,,	–	8.3.6.3
CH.B. square-wave response in ADD-mode		No change in square-wave response when operating the ADD push button	,,		8.3.6.3.
Square-wave response channel B - INVERT		No change in square-wave response when operating the PULL FOR B switch	,,	–	8.3.6.3.
Bandwidth		Vertical deflection must be 6 divisions at 1 MHz input and 4,6 divisions minimum at 60 MHz.	Sine-wave signal of 12 mVp-p – 60 MHz	Tektronix SG 503 + SG 504	8.3.6.4
OFFSET control range	-	Display can be shifted more than 15 divisions on both sides	Sine wave signal of 1.2 Vp-p – 20 MHz	Tektronix SG 503 + SG 504	8.3.6.5
Common mode rejection		Rejection factor better than 100	Sine-wave signal of 960 mVp-p – 2 MHz	Tektronix SG 503 + SG 504	8.3.6.6.
TIME COEFFICIENTS					8.3.7
Recurrent-mode	R2958 (A22)	Correct 20 ns range	Square wave signal of 160 mV pulse repetition rate of 20 nsec to X3	Tektronix TG 501	8.3.7.1
	R2911 (A22)	Correct start point of the trace on the screen	Square wave signal of 160 mV-pulse repetition rate of 20 ns to X3	Tektronix TG 501	8.3.7.1
ROLL-mode		Correct ROLL-mode in 0.5 s/div and 1 s/div	Square wave signal with a repetition rate of 0.5 s or 1s	Tektronix TG 501	8.3.7.2
Effective delay		Correct effective delay (≥ 10 ns)	Square-wave voltage of 2.4 Vp-p – 100 kHz – rise time ≤ 3 ns	–	8.3.7.3
Single shot	-	Accu is refreshed	Square-wave signal of 1,2 V p.p – 1 kHz	PM 5129	8.3.7.4
Multiple		All four memories are refleshed	Square wave signal of 1,2 V p.p – 1 kHz	PM 5129	8.3.7.5
VCO	C1213	0,2μs/div ... Vcx = 400mV		PM2517 or PM2527	8.3.7.6.
TRIGGERING					8.3.8.
Trigger sensitivity	R2867 (A22)	Triggered display	Sine-wave signal of 20 mVp-p – 2 kHz to X3	PM 5129	8.3.8
Trigger slope and level		Starting point trace on positive or negative signal edge when the SLOPE switch is operated	Sine wave signal of 240 mVp-p – 2 kHz to X3	PM 5129	8.3.8.
	–	Correct LEVEL function	Sine-wave signal of 960 mVp-p – 2 kHz to X3	PM 5129	8.3.8
Trigger level AUTO		Trigger point can be shifted over at least 4 divisions when operating the LEVEL control	Sine-wave signal of 240 mVp-p – 100 Hz to X3	PM 5129	8.3.8
Trigger level EXT		Trigger point can be shifted over total signal amplitude when operating the LEVEL control	Sine-wave signal of 240 mVp-p – 100 Hz to X3 Sine-wave signal of 3.2 Vp-p – 2 kHz to X6	PM 5129 PM 5129	8.3.8
Trigger level EXT : 10		Trigger point can be shifted over total signal amplitude when operating the LEVEL control	Sine-wave signal of 240 mVp-p -- 100 Hz to X3 Sine-wave signal of 32 Vp-p – 2 kHz to X6	PM 5129 PM 5129	8.3.8
Trigger sensitivities			Sine-wave signal to X3	Tektronix SG 503 + SG 504	8.3.8.
		Triggered display in AUTO Triggered display in AUTO Triggered display in AC Triggered display in AC Triggered display in DC Triggered display in DC Triggered display in EXT Triggered display in EXT Triggered display in EXT : 10 Triggered display in EXT : 10	100 Hz – 0,75 div 60 MHz – 1,5 div. 20 Hz – 0,75 div 60 MHz – 1,5 div. 10 Hz – 0,75 div 60 MHz – 1,5 div 40 MHz – 0,15 V 60 MHz – 0,3 V 40 MHz – 1,5 V 60 MHz – 3 V		
	–	Triggered display in DC	Sine wave signal of 300 mV p.p 60 MHz to X4	Tektronix SG 503 + SG 504	8.3.8
Triggering at mains frequency		Triggered display	Mains voltage derived signal of 200 mVp-p to X3		8.3.8.
TV triggering	–	Triggered display	T.V. signal CCIR norm – 625 lines positive video - amplitude 0.5 division sync pulse.		8.3.8
Trigger delay	R2910 (A22)	Correct trigger delay functioning	Square-wave signal of 2 MHz - rise time : 1 ns to X3		8.3.8.

ADJUSTMENT	ADJUSTING ELEMENT + UNIT	ADJUSTING RESULT OR CHECK RESULT	RECOMMENDED INPUT SIGNALS	EXAMPLE OF MEASURING INSTRUMENT	CHAPTER
Gain	R544 (A5)	Mid-range	-	–	8.3.8
V_{REF}	R541 (A5)	0 V between V_{REF} and earth	Sine-wave 2 kHz for 0,5 div displ.	PM 2517	8.3.8.
OFFSET	R555 (A5)	Just triggered			
Level ccw	R542 (A5)	NOT TRIGD LED lights then extinguishes	Sine wave 2 kHz for 8 div displ.		8.3.8
Level cw	R543 (A5)	NOT TRIGD LED lights then extinguishes	Sine-wave 2 kHz for 8 div displ.		8.3.8.
X Y MODE	–	Straight line with an angle of 45° with the positive horizontal axis	Sine-wave signal of 240 mVp-p – 2 MHz to X3 and X4		8.3.9.
RANGE INDICATION		Correct V/div display change when connecting probes with range indication			8.3.10
PLOTTER OUTPUTS	-	Correct plotting	Square-wave signal	PM 5129	8.3.11
PERIODIC AND RANDOM		Ripple-noise instability of the trace and microfony $\leqslant$ 2 mm			8.3.12
EFFECT OF MAINS VOLTAGE VARIATIONS		No change in trace height and trace width when mains voltage is varied by + or – 10 %	CAL signal to X3 and X4		8.3.13

8.3. CHECKING AND ADJUSTING PROCEDURE

8.3.1. Power supply

Power consumption

- Check that the mains adapter switch S45 has been set to the local mains voltage and connect the instrument to such a voltage.
- Switch the oscilloscope on and check that the pilot lamp on POWER ON the front panel lights up.
- Check that the current consumption does not exceed 300 mA at 220 V local mains and 600 mA at 117 V local mains. (Measured with a moving-iron meter.)

+12 V supply voltage

- Check at nominal mains voltage that the voltage on the positive pole of C1513 on unit A15 is +12,6 V ± 1 %; if necessary readjust potentiometer FEEDBACK **R1646** on unit A16.
- Check that this voltage does not vary more than ± 60 mV when the mains voltage is varied between 200 V and 265 V or between 100 V and 130 V.
- Check that the +5 V on the positive pole of C1527 on unit A15 is +5 V ± 0.25 V.
- Check that the oscilloscope starts at 180 V or 90 V.

Frequency

- Set the mains input voltage to 180 V or 90 V.
- Check that the voltage on the positive pole of C1513 on unit A15 has a 100 Hz ripple that does not exceed 10 mV. If necessary; readjust potentiometer FREQ. **R1647** on unit A16.

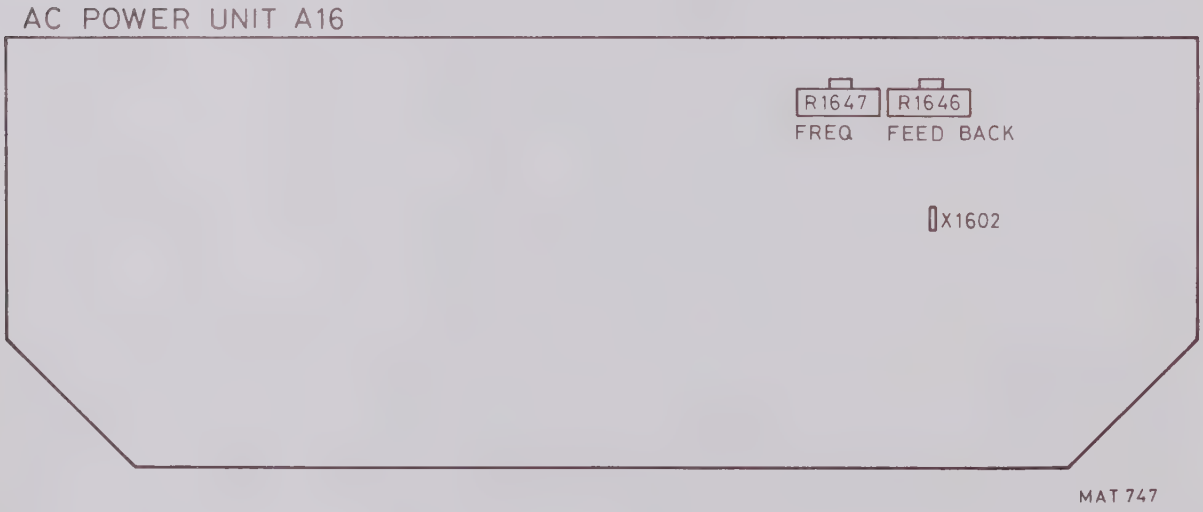

Fig. 8.3.1.

8.3.2. Cathode-ray-tube circuit

Cathode voltage

– Check that the voltage on testpoint X1502 on unit A15 is −1.5 V.
  If necessary; readjust potentiometer **R1591** on unit A15.

Intensity

– Set the front panel INTENS control R15 to 90° from its left hand stop.
– Adjust potentiometer **R1589** on unit A15 in such a way that the trace is just not visible.

Focus and astigmatism

– Depress pushbutton DISPLAY STO1 S2.
– Depress pushbutton WRITE S12-A.
– Set channel A AMPL/DIV switch S20 to position 0.2 V/div. (40 mV/div. on the screen and in the alphanumeric display).
– Set TIME/DIV switch S23 to position 50 ms/div.
– Depress pushbutton AUTO S29-A of the trigger mode selector switch.
– Depress pushbutton Yx5 S16-B.
– Apply a sine-wave voltage of 240 mV-2 kHz to the A-input socket X3.
– Depress pushbutton SAVE STO1 S8.
– Depress pushbutton LOCK S12-B.
– Depress pushbutton DOTS S17.
– Set FOCUS LINE potentiometer **R1588** on unit A15 in its mid-position.
– Set the front panel INTENS control R15 to maximum brightness.
– Adjust FOCUS potentiometer **R1506** on unit A15 and ASTIGMATISM potentiometer **R1587** on unit A15 for a sharp and well-defined trace over the whole screen area.
– Check that the trace remains focused when the intensity is varied.

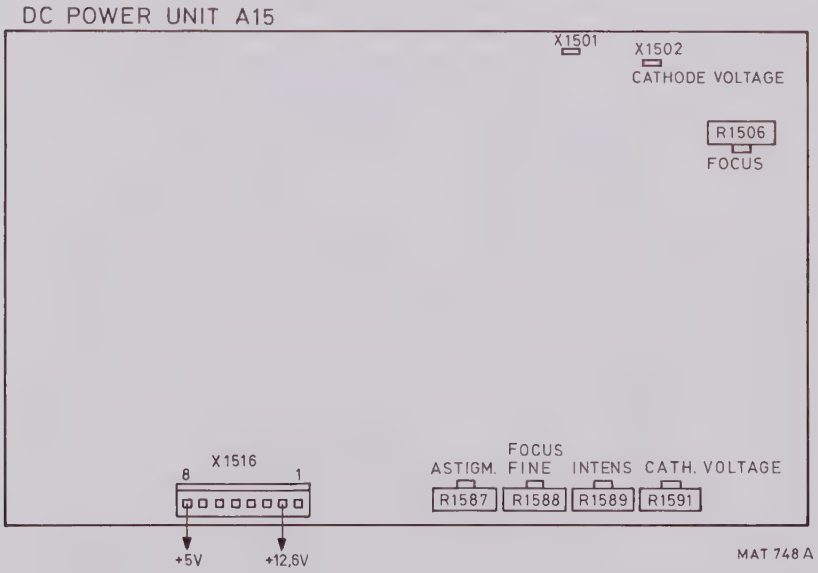

Fig. 8.3.2.

Trace rotation

– Release push-button DOTS S17.
– Depress push-button WRITE S12-A.
– Depress both push-buttons CLEAR S11 and SAVE STO1 S8 simultaneously.
– Set the STO1 Y POSITION control R4 in such a way that the trace is placed in the centre of the screen.
– Check that the trace runs exactly in parallel with the horizontal graticule lines; if necessary, readjust the TRACE ROTATION screw driver control **R16** on the front panel.
– Release push-button DISPLAY STO1 S2.
– Remove the input signal.

Fig. 8.3.3.

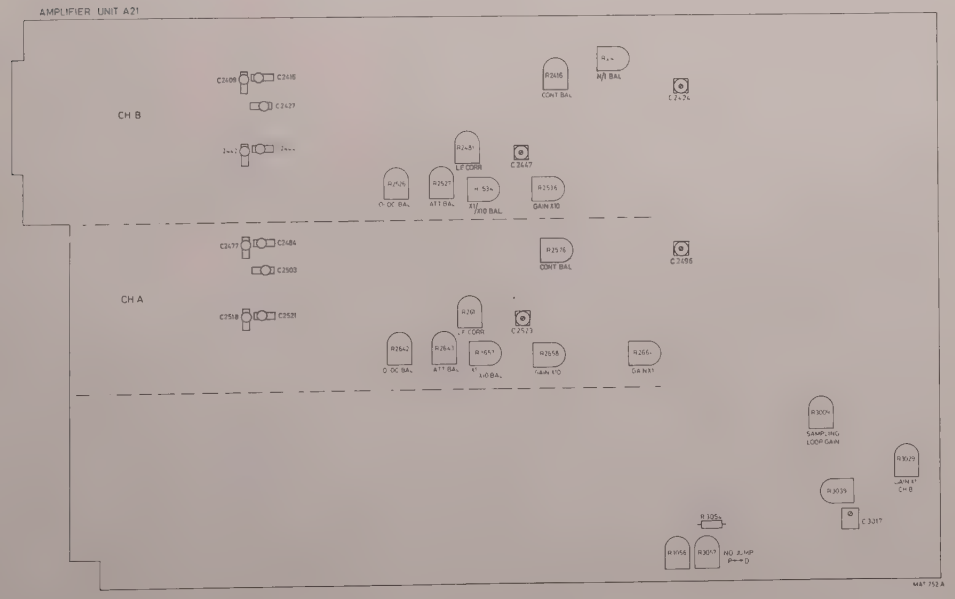

Fig. 8.3.4.

8.3.3. Pre-adjustment P²CCD circuit

– Check that the trace does not jump when the TIME/DIV switch S23 is switched between positions 0.2 ms/div and 0.5 ms/div.
If necessary, readjust potentiometer **R3057** on unit A21.

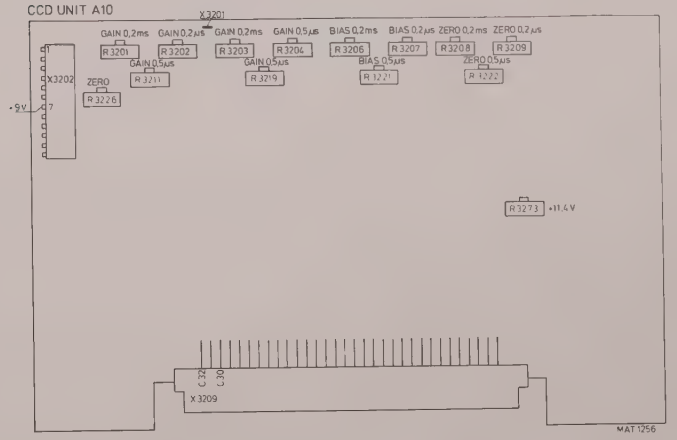

Fig. 8.3.5.

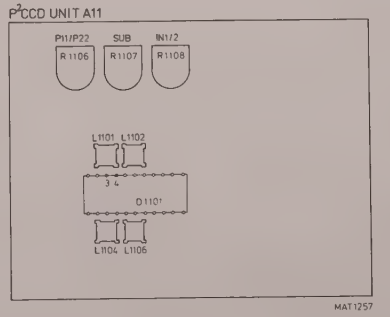

Fig. 8.3.6.

8.3.3.1. P^2CCD adjusting procedure

IMPORTANT: Before adjusting the P^2CCD be sure that the channels are adjusted correctly in the direct mode.

PRELIMINARY SETTINGS

- Depress the channel A ON-OFF pushbutton S32
- Release the channel B ON-OFF pushbutton S34
- Set the channel A variable AMPL/DIV control R7 in the CAL position
- Depress RECURR S38-C
- Depress pushbutton AUTO S29
- Depress pushbutton A of the trigger selection switch S39
- Depress pushbutton ACCU DISPLAY S1
- Release pushbutton STO1, STO2 and STO3, S2, S3 and S4
- Depress pushbutton WRITE S12-A
- Depress pushbutton X = t S15-A
- Depress pushbutton Y x 5 S16-B
- Set the X-MAGN control R2 into its CAL position
- Set the TIME/DIV switch S23 to position 0,5ms/div
- Set the channel A AMPL/DIV switch to 0,1V/div
- Depress the channel A 0 pushbutton and adjust the trace to the centre of the screen with the OFFSET control and release the 0 pushbutton
- Apply a sine-wave of 1kHz, with an amplitude to obtain a display of 8 divisions on the screen, to the channel A input socket X3
- Set the TIME/DIV switch S23 to position 0,2ms/div
- Switch off the instrument
- Connect point C22 of pcb connector X2004 (Unit A20) to ground
- Connect points C30 and C32 of pcb connector X3209 (Unit A10) to ground
- Connect the measuring oscilloscope to signal V OUT (testpoint X3201 unit A10) and trigger it on the negative edge of the signal NULIN (testpoint X902 unit 9)
  Settings of the measuring oscilloscope: 0,5V/div; 1ms/div; zero line in the centre of the screen.
  The use of a 10:1 probe is necessary!
- Switch on the instrument again

ADJUSTING PROCEDURE

Low frequency P^2CCD adjustment

0,2ms/div P^2CCD low frequency adjustment:

1. Adjust the positive supply voltage with R3273 to +11,4 ± 0,05V.
   Measuring point: X3202 point 5.
2. Check that the negative supply voltage is between −11,3V and −11,5V.
   Measuring point: X3202 point 4.
3. Adjust the following potentiometers to the indicated voltages:

R1107 to +2V ± 0,5V (SUB)	measuring point: IC1101 pin 3.
R1106 to +6V ± 0,1V (P11/P22)	measuring point: IC1101 pin 4.
R3206 to +9V ± 0,5V (BIAS)	measuring point: X3203 pin 7.
R3208 (ZERO) to midposition	
R3201 (GAIN) to midposition	

4. Turn R1108 (IN1/IN2) completely clockwise, then turn slowly counter-clockwise until two sine-wave signals appear on the screen of the measuring oscilloscope.
   Turn on until the sine waves abruptly disappear.

NOTE: If the NULIN lines exceed + and −2000mV readjust to zero with potentiometer R3208 (ZERO).

Now turn R1108 slowly clockwise, just sofar that two stable sine-waves are displayed on the screen of the measuring oscilloscope.

5. Set the measuring oscilloscope to 0,1V/div.
6. Adjust R3208 (ZERO) so that the NULIN signals on the measuring oscilloscope screen are at + and −1V level. Be sure that the signals are adjusted according to figure A.
7. Adjust R3226 in combination with R3208 so that the NULIN signals are at + and −1V level and are symmetrical around the zero line.
8. Adjust R3201 and R3203 (GAIN) for 8 divisions display on the PM3311.
9. Adjust R3206 (BIAS) for optimal covering of the two sine waves on the PM3311 screen.
10. After each changement of 3206 start with point 6. again.
11. Apply a square-wave of 1kHz and check that the signal corresponds to fig.B. If necessary increase the SUB voltage with R1107 for approx. 3V.

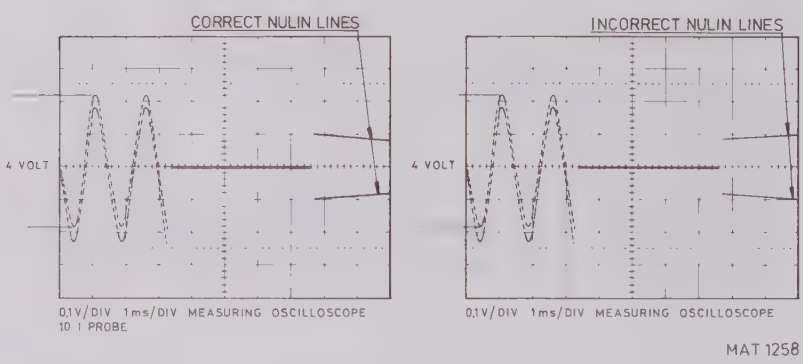

Fig. A.

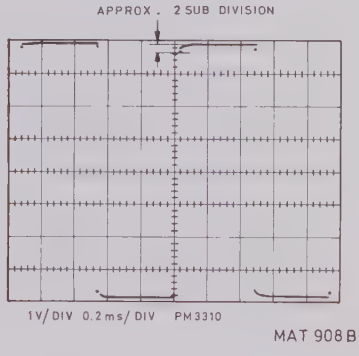

Fig. B.

12. After each adjustment of R1107 start with point 4. again.

NOTE 1: If point 9. is not successfull, then try another value for P11/P22 (± 0,5V). It may be necessary to increase the SUB voltage too. Start with point 4. again.

NOTE 2: Apply a sine-wave of 4 divisions amplitude and shift it by means of the OFFSET control over the screen. Check if the amplitude changes no more than 0,5 sub-division, otherwise start with point 9. again. Reset the input signal to 8 divisions.

High frequency P^2CCD adjustments

0,5µs/div P^2CCD adjustment:

1. Set the TIME/DIV switch to 0,5µs/div.
2. Apply a sine-wave of 400kHz with an amplitude to obtain a display of 8 divisions display on the PM3311 screen.
3. Adjust L1101, L1102, L1104 and L1106 so that:
   a. The NULIN signals on the measuring oscilloscope screen are at + and −1V level.
   b. The display of the PM3311 shows about 8 divisions amplitude.
   c. The covering of the two sine waves is optimal on the screen of the PM3311.
   d. Check the 1µs/div position for correct display.
   Eventually optimisme the adjustment of the coils between the positions 0,5µs/div and 1µs/div.
4. Disconnect the ground connection of X3209 points C30 and C32.
5. Adjust R3222 so that the NULIN signals on the measuring oscilloscope screen are at + and −1V level. Be sure that the signals are adjusted according to figure A.
6. Adjust R3211 and R3219 (GAIN) for 8 divisions display on the screen of the PM3311.
7. Adjust R3221 (BIAS) for optimal covering of the two sine-waves on the PM3311 screen.
8. After each adjustment of R3221 start with point 5. again.

This is the end of the 0,5µs/div P^2CCD adjustment.

NOTE 1: Apply a sine-wave of 4 divisions amplitude and shift it by means of the OFFSET control over the screen. Check if the amplitude changes no more than 0,5 sub-division, otherwise start with point 7. again. Reset the input signal to 8 divisions.

0,2µs/div P^2CCD adjustment:

1. Adjust R3209 so that the NULIN signals on the measuring oscilloscope are at + and −1V level.
2. Adjust R3202 and R3204 (GAIN) for 8 divisions display on the screen of the PM3311.
3. Adjust R3207 (BIAS) for optimal covering of the two sine-waves on the PM3311 screen.
4. After each adjustment of R3207 start with point 1. again.

NOTE 1: If it is not possible to adjust for 8 divisions amplitude, decrease the SUB voltage and readjust completely.

NOTE 2: Apply a sine-wave of 4 divisions amplitude and shift it by means of the OFFSET control over the screen. Check if the amplitude changes no more than 0,5 sub-division, otherwise start with point 3. again.

8.3.4. Balance adjustments

The adjustments of the vertical channels A and B are identical.
The knobs, sockets and adjusting elements of channel B are shown in brackets after those of channel A.
These balance adjustments influence one another and must, therefore, be readjusted in the sequence in which they are described.

8.3.4.1. Vertical amplifier balances

0-DC balance

- Set channel A (B) AMPL/DIV switch S20 (S22) in position 50 mV/div.
- Check that the trace does not jump when pushbutton 0 S31 (S35) is operated.
  If necessary, readjust potentiometer **R2642 (R2526)** on unit A21 for minimum jump.
- Release the channel A (B) 0 pushbutton S31 (S35).

Attenuator balance

- Set the trace in the centre of the screen with the channel A (B) OFFSET control R10 (R12).
- Release pushbutton DOTS 16-C.
- Set TIME/DIV switch S23 to position 0.5 ms/div.
- Depress channel A (B) ON-OFF pushbutton S32 (S34) to ON.
- Check that the trace does not jump when the AMPL/DIV switch S20 (S22) is switched between 10 mV/div. 20 mV/div and 50 mV/div.
  If necessary readjust potentiometer **R2643 (R2527)** on unit A21 for minimum jump.

X1/X10 balance

- Check that the trace does not jump, when the channel A (B) AMPL/DIV switch S20 (S22) is switched between positions 50 mV/div and 0.1 V/div.
  If necessary, readjust potentiometer **R2657 (R2534)** on unit A21 for minimum jump.

Continue balance

- Set channel A (B) AMPL/DIV switch S20 (S22) in position 50 mV/div.
- Check that the trace does not move when the channel A (B) AMPL/DIV continuous control R7 (R8) is rotated between minimum and maximum.
  If necessary, readjust potentiometer **R2576 (R2416)** on unit A21 for minimum shift.
- Release the channel A (B) ON-OFF pushbutton S32 (S34) to OFF.

Follow the same procedure for channel B.

Normal/Invert balance (ONLY for channel B)

- Depress channel B ON-OFF pushbutton S34 to ON.
- Check that the trace does not jump when the channel B OFFSET control S28 is pulled and pushed.
  If necessary, readjust potentiometer **R2411** on unit A21 for minimum jump.
- Push channel B OFFSET control S28 to normal.

8.3.4.2. Trigger point symmetry

- Check that the voltage on testpoint X2707 is −1 V.
- If necessary, readjust potentiometer R2819 on the trigger-unit.

8.3.4.3. Trigger balances AC-DC

External

- Depress channel B ON-OFF pushbutton S34 to ON.
- Set TIME/DIV switch S23 to position 0.5 ms/div.
- Set the channel B AMPL/DIV switch S22 to position 1 V/div (0.2 V/div on the screen and in the alphanumeric display).
- Depress pushbutton EXT S39-C of the trigger source selector switch.
- Depress pushbutton AC S29-B of the trigger mode selector switch.
- Apply a sine-wave signal of 1.2 Vp-p – 2 kHz to the channel B input socket X4 as well as to the EXT input socket X6.
- Set the LEVEL control R9 for a stable display.

– Check that the trigger point does not shift when the trigger mode selector switch S29 is switched between AC and DC. If necessary, readjust potentiometer **R2753**, on unit A22 for minimum shift, in DC-mode.
– Remove the input signal from EXT input socket X6 and from channel B input socket X4.

A balance

– Depress channel A ON-OFF pushbutton S32 to ON.
– Release channel B ON-OFF pushbutton S34 to OFF.
– Set the channel A AMPL/DIV switch S20 to position 1 V/div (0.2 V/div on the screen and in the alphanumeric display).
– Depress pushbutton A S39-A of the trigger source selector switch.
– Depress pushbutton AC S29-B of the trigger mode selector switch.
– Apply a sine-wave signal of 1.2 Vp-p – 2 kHz to the channel A input socket X3.
– Set the LEVEL control R9 for a triggered display.
– Check that the trigger point does not move when the trigger mode selector switch S29 is switched between AC and DC.
If necessary, readjust potentiometer **R2861** on unit A22, in DC-mode.
– Remove the input signal from channel A input socket A3.

B balance

– Depress channel B ON-OFF pushbutton S34 to ON.
– Release channel A ON-OFF pushbutton S32 to OFF.
– Set the channel B AMPL/DIV switch S22 to position 1 V/div (0.2 V/div on the screen and in the alphanumeric display).
– Depress pushbutton B S39-B of the trigger source selector switch.
– Depress pushbutton AC S29-B of the trigger mode selector switch.
– Apply a sine-wave signal of 1.2 Vp-p – 2 kHz to the channel B input socket X4.
– Set the LEVEL control R9 for a triggered display.
– Check that the trigger point does not shift when the trigger mode selector switch S29 is switched between AC and DC.
If necessary, readjust potentiometer **R2859** on unit A22, in DC - mode.
– Release the channel B ON-OFF pushbutton S34 to OFF.
– Remove the input signal from channel B input socket X4.

LINE balance

– Depress pushbuttons EXT and EXT÷10 of the trigger source selector switch S39 simultaneously (LINE).
– Depress the channel A ON-OFF switch S32 to ON.
– Set TIME/DIV switch S23 to position 10 ms/div.
– Apply a mains voltage derived signal via a mains transformer with an amplitude of 6 divisions to the channel A input socket X3.
– Check that the trigger point does not move when the trigger mode selector switch S29 is switched between AC and DC.
If necessary readjust potentiometer **R2857** on unit A22, in DC-mode.
– Remove the input signal from channel A input socket X3.

8.3.4.4. Trigger amplifier balance

– Set TIME/DIV switch S23 to position 0.5 ms/div.
– Set the LEVEL control R9 in its mid-position.
– Depress pushbutton A S39-A of the trigger source selector switch.
– Depress pushbutton AUTO S29-C of the trigger mode selector switch.
– Apply a sine-wave signal of 1.2 Vp-p – 2 kHz to the channel A input socket X3.
– Check that the trigger point is situated in the middle of the signal amplitude.
If necessary, readjust potentiometer **R2867** on unit A22.

8.3.4.5. Trigger point symmetry

– Depress pushbutton DCS29-A of the trigger mode selector switch.
– Set LEVEL control R9 in its mid-position.
– Check that the trigger point is situated in the middle of the signal amplitude.
If necessary, readjust potentiometer **R 2819** on unit A22.
– Remove the input signal from channel A input socket X3.

8.3.5. Final amplifier adjustments

Vertical trace height

- Depress the channel A ON-OFF switch S32 to ON.
- Depress pushbutton A of the trigger source selector switch S39.
- Depress pushbutton AUTO of the trigger mode selector switch S29.
- Depress pushbutton Yx5 S16-B.
- Depress pushbutton WRITE S12-A.
- Depress the ACCU DISPLAY pushbutton S1.
- Set the TIME/DIV switch S23 to position 0.5 ms/div.
- Depress pushbutton CLEAR S11 and shift the trace to −1 div simultaneously.
- Apply a signal to channel A input socket X3 with an amplitude so high that the display on the C.R.T. screen is blinking at the upper side.
- Adjust potentiometer **R2008** on unit A20 so that the display is blinking at + 4 divisions. If necessary, repeat this procedure.
- Remove the input signal.

Display positions ACCU - STO1 - STO2 - STO3

- Depress the four ACCU - STO1 - STO2 and STO3 DISPLAY pushbuttons S1-S2-S3 and S4.
- Depress pushbutton CLEAR S11, keep it in the depressed position and depress then the pushbuttons SAVE STO1 S8, SAVE STO2 S9, SAVE STO3 S10 and LOCK S12-B
- Turn the ACCU - STO1 - STO2 and STO3 Y POSITION controls R1-R4-R5 and R6 such that the four traces cover each other in the centre of the screen.
- Depress pushbutton Yx1 S16-A.
- Adjust potentiometer **R2009** on unit A20 for a distance of two divisions between the traces.

Invert registers

- Depress pushbutton WRITE S12-A
- Set the channel A AMPL/DIV switch S20 to position 1 V/div
- Apply a sine-wave voltage of 1.2 Vp-p – 2 kHz to the channel A input socket X3.
- Depress pushbuttons SAVE STO1 S8, SAVE STO2 S9 and SAVE STO3 S10.
- Pull the invert switches S5, S6 and S7 and check that STO1, STO2 and STO3 are inverted.
- Push the switches S5, S6 and S7.
- Remove the input signal.

Horizontal trace length

- Clear STO1, STO2 and STO3.
- Adjust with potentiometer **R2011** on unit A20 the length of the horizontal lines on the screen for 10 divisions.

Dot joint adjustments

- Release pushbutton DOTS S17.
- Depress the channel A ON-OFF pushbutton S32 to ON.
- Release the channel B ON-OFF pushbutton S34 to OFF.
- Depress pushbutton WRITE S12-A.
- Depress pushbutton Yx5 S16-B.
- Apply a sine-wave signal with a trace height for 6 divisions display and a frequency of 2 kHz to the channel A input socket X3.
- Set TIME/DIV switch S23 to position 0.2 ms/div.
- Depress pushbutton SAVE STO1 S8.
- Depress DISPLAY pushbutton STO1 S2.
- Release the ACCU - STO2 and STO3 DISPLAY buttons S1 - S3 and S4.
- Check that the dot join faults in vertical direction are equal for the positive going edge and the negative going edge of the signal.
  If necessary equalize these faults with potentiometer **R2019** on unit A20.
- Eliminate the dot join faults by adjusting potentiometer **R2018** on unit A20.
- Adjust potentiometer **R2072** on unit A20 so that the dots on the screen are really connected with each other.
- Depress the channel B ON-OFF pushbutton S34 to ON.

- Depress pushbutton SAVE STO1 S8.
- Check that in double channel operation the dot join system still functions correctly.
- Adjust potentiometer **R2039** on unit A20 for minimum cross-talk between the two channels A and B.
- Remove the input signal.
- Release pushbutton STO1 DISPLAY S2.

CALibration voltage

- Check that the amplitude of the CAL voltage on CAL terminal X1 is 3V ± 0.7%.
  If necessary, readjust potentiometer **R2017** on unit A20.
- Check that the frequency of the CAL voltage is 2.5 kHz.

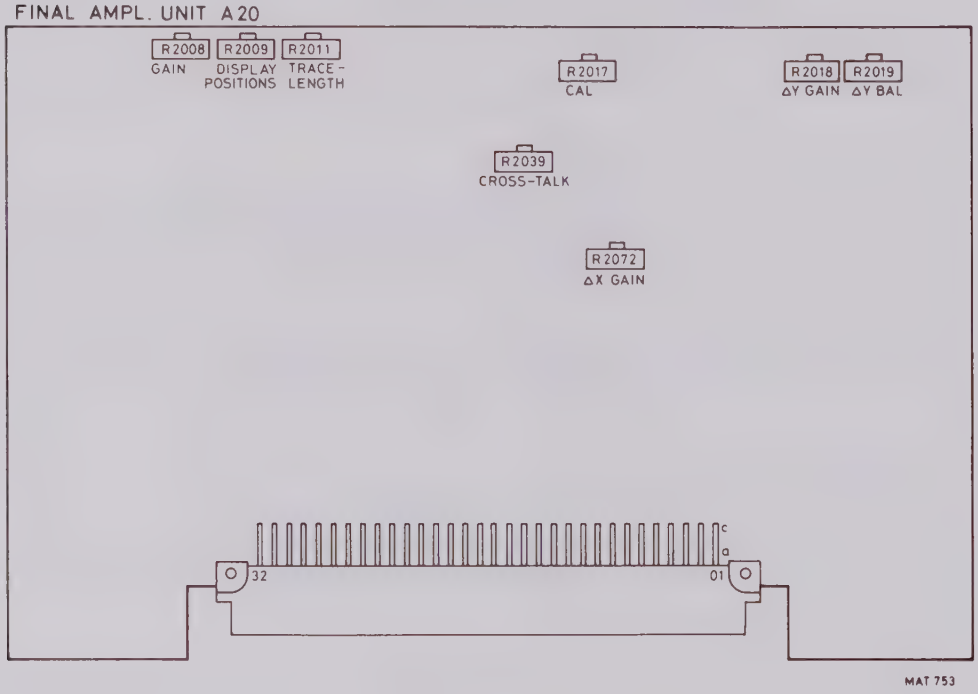

Fig. 8.3.7.

8.3.6. Vertical channels

The adjustments of the vertical channels A and B are identical.
The knobs, sockets and adjusting elements of channel B are shown in brackets after those of channel A.

8.3.6.1. Vertical amplifier sensitivity adjustments

Before checking the sensitivities, check the balances in accordance with section 8.3.4.

Channel B gain x1

- Depress the channel A and B ON-OFF pushbuttons S32 and S34 to ON.
- Release the channel A and B AC-DC switches S30 and S36 and the 0 switches S31 and S35.
- Set the channel A and B AMPL/DIV switches S20 and S22 to position 0.2 V/div (40 mV/div on the screen and in the alphanumeric display).
- Set the channel A and B AMPL/DIV continuous control R7 and R8 in the CAL position.
- Set the channel A and B OFFSET controls R10 and R12 so that the traces are shifted to the centre of the screen.
- Depress pushbutton RECURR S38-C.
- Set the TIME/DIV switch S23 to position 0.5 ms/div.
- Depress pushbutton AUTO of the trigger mode selector switch S29.
- Depress pushbutton B of the trigger source selector switch S39.
- Depress the ACCU DISPLAY pushbutton S1.
- Release the DISPLAY pushbuttons STO1 - STO2 and STO3, S2-S3 and S4.
- Depress pushbutton WRITE S12-A.
- Depress pushbutton X = t S15-A.
- Depress pushbutton Y x 5 S16-B.
- Set the XMAGN control R2 to its CAL position.
- Apply a square-wave signal of 240 mVp-p – 2 kHz to the channel B input socket X4.
- Adjust potentiometer **R3029** on unit A21 for a trace height of 6 divisions.

Channel A gain x1

- Depress pushbutton A of trigger source selector switch S39.
- Apply a square-wave signal of 240 mVp-p – 2 kHz to the channel A input socket X3.
- Adjust potentiometer **R2661** on unit A21 for a trace height of 6 divisions.

Channel A (B) gain x10

- Set channel A (B) AMPL/DIV switch S20 (S22) to position 20 mV/div (4 mV/div on the screen and in the alphanumeric display).
- Apply a square-wave signal of 24 mVp-p – 2 kHz to channel A (B) input X3 (X4).
- Adjust potentiometer **R2658 (R2536)** on unit A21 for a trace height of 6 divisions.

L.F. Correction

- Set channel A (B) AMPL/DIV switch S20 (S22) to position 0.2 V/div (40 mV/div on the screen and in the alphanumeric display).
- Apply a square-wave signal of 240 mVp-p – 100 Hz to channel A (B) input socket X3 (X4).
- Set TIME/DIV switch S23 to position 1 ms/div.
- Check that the pulse top is straight; if necessary, readjust potentiometer **R2611 (R2481)** on unit A21.

AC-DC channel A (B)

- Depress push-button AC-DC of channel A (B) - S30 (S36).
- Check that the pulse top difference is more than 0.5 div.

Sampling loop gain

- Set the TIME/DIV switch S23 to position 0.2 ms/div.
- Depress the channel A and B ON-OFF pushbuttons S32 and S34 to ON.
- Apply a square-wave signal of 240 mV – 2 kHz to channel A input socket X3.
- Set the channel B OFFSET control R12 so that the trace is set in the middle of the screen.
- Set the TIME/DIV switch S23 to position 0.5 ms/div.

– Adjust potentiometer R3009 on unit A21 so that the pulse top is straight.
– Adjust potentiometer R3056 on unit A21 so that the pulse variation is symmetrical.
– Adjust potentiometer R3057 on unit A21 so that the channel B line is in the middle of the screen.
If the range of R3057 is too small, change resistor R3054 (limits between 5K62 and 2K49).
– If necessary, repeat this procedure.

8.3.6.2. Input attenuators (square-wave response and input capacitance)

– Set TIME/DIV switch S23 to position 20 µs/div.
– Depress channel A (B) ON-OFF pushbutton S32 (S34) to ON.
– Release channel B (A) ON-OFF pushbutton S34 (S32) to OFF.
– Release the channel A (B) AC-DC pushbutton S30 (S36) to DC.
– Release the channel A (B) 0 pushbutton S31 (S35).
– Apply a square-wave voltage with a frequency as indicated in the table below, rise time ⩽ 100 ns to the channel A (B) input socket X3 (X4); peak to peak value as indicated in the table below.
– Check that the pulse top is straight, and pulse top errors does not exceed + or – 4%; if necessary readjust the relevant trimmers on unit A21.

2 : 1 DUMMY PROBE
1 MHz//25 pF

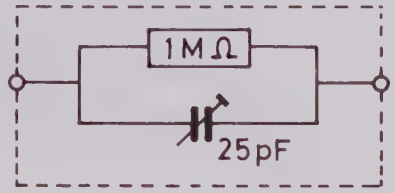

A (B) AMPL/DIV S20 (S22)	CHANNEL A (B) INPUT SIGNAL	ADJUSTER	TRACE HEIGHT
20 mV/div	2 kHz – 24 V	**C2503 (C2427)**	6 div +/–4 %
20 mV/div	10 kHz – 48 mV via dummy	C dummy	6 div +/–4 %
0.2 V/div	2 kHz – 240 mV	–	6 div +/–4 %
0.2 V/div	10 kHz – 480 mV via dummy	–	6 div +/–4 %
2 V/div	2 kHz – 2.4 V	**C2521 (C2444)**	6 div +/–4 %
2 V/div	10 kHz – 4.8 V via dummy	**C2518 (C2442)**	6 div +/–4 %
20 V/div	2 kHz – 24 V	**C2484 (C2416)**	6 div +/–4 %
20 V/div	10 kHz – 48 V via dummy	**C2477 (C2409)**	6 div +/–4 %

Note: The difference in input capacitance between channel A and channel B may not exceed 0.5 pF.

– Check that the range of the continuous control R7 (R8) is 1 : > 2.6.
– Remove the input signal.

8.3.6.3. Square-wave response vertical channel

Square-wave response channel A (B) x 1

– Set TIME/DIV switch S23 to position 20 ns/div.
– Depress channel A (B) ON-OFF switch S32 (S34) to ON.
– Release channel B (A) ON-OFF switch S34 (S32) to OFF.
– Set the channel A (B) AMPL/DIV switch S20 (S22) to position 0.2 V/div (40 mV/div on the screen and in the alphanumeric display).
– Apply a square wave voltage of 240 mV - 1 MHz, risetime ⩽ 1 ns to the channel A (B) input socket X3.
– Check the square wave response of channel A.
Pulse top errors may not exceed 1 subdivision; if necessary, readjust R3039, C3017, C2447 and C2424, or check the square wave response of channel (B).
Pulse top errors may not exceed 1 subdivision; if necessary, readjust C2424 and C2447 (C2496 and C2523).

Channel A square-wave response in ADD-mode

- Depress pushbutton ADD S33.
- Depress channel A ON-OFF pushbutton S32 to ON.
- Release channel B ON-OFF pushbutton S34 to OFF.
- Depress pushbutton A of the trigger source selector S39.
- Check that the square-wave response does not change when pushbutton ADD S33 is operated.

Channel B square-wave response in ADD-mode

- Release channel A ON-OFF pushbutton S32 to OFF.
- Depress channel B ON-OFF pushbutton S34 to ON.
- Depress pushbutton B of the trigger source selector S39.
- Check that the square-wave response does not change when pushbutton ADD S33 is operated.

Square-wave response channel B-INVERT

- Depress channel B ON-OFF pushbuttons S34 to ON.
- Check that the square-wave response does not change when the PULL FOR –B switch S28 is operated.
- Remove the input signal.

8.3.6.4. Bandwidth

- Depress channel A (B) ON-OFF pushbutton S32 (S34) to ON.
- Release channel B (A) ON-OFF pushbutton S34 (S32) to OFF.
- Set the channel A (B) AMPL/DIV switch S20 (S22) to position 10 mV/div (2 mV/div on the screen and in the alphanumeric display).
- Apply a sine-wave signal of 12 mVp-p and a frequency of 1 MHz to channel A (B) input socket X3 (X4).
- Set TIME/DIV switch S23 in such a position that about ten sine-waves are displayed on the screen (1 ms/div).
- Check that the trace height is 6 divisions.
- Increase the frequency of the input signal to 60 MHz (amplitude still 12 mVp-p).
- Set TIME/DIV switch S23 in such a position that about ten sine-waves are displayed on the screen (20 ns/div).
- Check that during the frequency range the trace height is at least 4,6 divisions.
- Remove the input signal.

If the trace height is less than 4,6 divisions, check the square-wave response again.

8.3.6.5. OFFSET control range

- Set TIME/DIV switch S23 to position 0.2 μs/div.
- Set channel A (B) AMPL/DIV switch S20 (S22) to position 0.2 V/div (40 mV/div on the screen and in the alphanumeric display).
- Apply a sine-wave signal of 1,2 Vp-p and a frequency of 2 MHz (= 30 div).
- Check that the display can be shifted more than 15 divisions on both sides by turning the channel A (B) OFFSET controls R10 (R12).
- Remove the input signal.

8.3.6.6. Common mode rejection

- Depress the channel A and B ON-OFF pushbuttons S32 and S34 to ON.
- Depress the channel A and B 0 pushbuttons S31 and S35.
- Set the channel A and channel B AMPL/DIV switches S20 and S22 to positions 0.2 V/div.
- Set the channel A and channel B AMPL/DIV continuous controls R7 and R8 to their CAL positions.
- Set the channel A and B OFFSET controls R10 and R12 so that the traces are situated in the centre of the screen.
- Release the channel A and B 0 pushbuttons S31 and S35.
- Depress pushbutton ADD S33.
- Pull PULL FOR –B switch S28.
- Apply a sine-wave signal with an amplitude of 960 mVp-p and a frequency of 2 MHz to the channel A as well as the channel B input sockets X3 and X4.
- Check that the rejection factor is better than 100. (Signal $<$ 0.25 divisions).

8.3.7. Time coefficient adjustments

8.3.7.1. Recurrent-mode

- Depress channel A ON-OFF pushbutton S32 to ON.
- Release channel B ON-OFF pushbutton S34 to OFF.
- Turn the XMAGN control R2 in the CAL position.
- Set channel A AMPL/DIV switch S20 to position 0.2 V/div (40 mV/div on the screen and in the alphanumeric display).
- Set the TIME/DIV switch S23 to position 20 ns/div.
- Apply a time marker signal of 160 mV and a pulse repetition rate of 20 ns to the channel A input socket X3.
- Check that the entre 8 cycles have a total width of 8 divisions.
  If necessary readjust potentiometer **R2958** on unit A22.
- Check that the range of the variable X-magn. R2 is 1 : > 2.5.
- Depress pushbutton DOTS S16-C.
- Turn potentiometer R2911 clockwise so that a horizontal trace appears at the left-hand side of the screen.
- Now adjust **R2911** on unit A22 so that the horizontal trace just disappears i.e. the first dot of the signal starts on the most left graticule line.
- Release pushbutton DOTS S16-C.
- Check all the TIME/DIV switch S23 positions in recurrent mode.
- Remove the input signal.

8.3.7.2. Roll-mode

- Depress pushbutton Y x 1 S16-A.
- Depress pushbutton ROLL S38-A.
- Apply a square wave signal with a repetition rate of 0.5 s to the channel A input socket X3.
- Depress pushbutton RUN-STOP S37.
- Check the ROLL-mode in TIME/DIV switch S23 position 0.5 s/div.
- Depress pushbutton CLEAR S11.
- Apply a voltage of +3 V to the external socket X6 and check that the ROLL-mode starts.
- Remove the voltage from X6.
- Depress pushbutton CLEAR S11.
- Apply a square wave signal with a repretition rate of 1 s to the channel A input socket X3.
- Depress pushbutton RUN-STOP S37.
- Check the ROLL-mode in TIME/DIV switch S23 position 1 s/div.
- Depress pushbutton CLEAR S11.
- Set the jumper S1201 on unit A12 in the left position.
- Depress pushbutton RUN-STOP S37.
- Check the ROLL-mode in TIME/DIV switch S23 position 60 min/div.
- Set the jumper S1201 on unit A12 in the correct position.
- Remove the input signal.

8.3.7.3. Effective delay

- Depress pushbutton RECURR S38-C.
- Depress pushbutton Yx5 S16-B.
- Set the TIME/DIV switch S23 to position 10 ns/div.
- Set channel A AMPL/DIV switch S20 to position 2 V/div (0.4mV/div. on the screen and in the alphanumeric display). Set the DELAY to 0000.
- Apply a square-wave voltage of about 2.4 Vp-p – 100 kHz and a rise time ⩽ 3 ns to the A input socket X3.
- Depress pushbutton DC of the trigger mode selector switch S29.
- Set LEVEL control R9 for a triggered display.
- Check that the effective delay is more than 1 division.

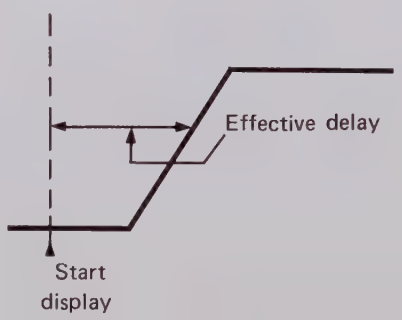

8.3.7.4. Single shot

- Depress pushbutton DISPLAY ACCU S1.
- Depress pushbuttons DISPLAY STO1, STO2 and STO3 (S2, S3 and S4).
- Depress pushbutton Yx1 S16-A.
- Set TIME/DIV switch S23 to position 2 ms/div.
- Depress pushbutton AC of the trigger mode selector switch S29.
- Apply a square wave voltage of 1.2 Vp-p, frequency 1 kHz to the channel A input socket X3.
- Set LEVEL control R9 for a triggered display.
- Remove the input signal.
- Depress pushbutton SINGLE S38-B and check that the pilot lamp NOT TRIG'D B23 lights up (depress RESET S37).
- Apply the square wave voltage to the channel A input socket X3 again.
- Check that the ACCU is refreshed and that the pilot lamp NOT TRIG'D B23 is extinguished.

8.3.7.5. Multiple

- Depress pushbutton RECURR S38-C.
- Remove the input signal.
- Depress pushbuttons ROLL and SINGLE (= MULTIPLE) S38-A and S38-B and check that the pilot lamp NOT TRIG'D B23 lights up (depress pushbutton RESET S37).
- Apply the square wave voltage to the channel A input socket X3 again.
- Check that all 4 registers are refreshed and that the pilot lamp NOT TRIG'D B23 is extinguished.
- Release pushbuttons S2, S3 and S4.
- Remove the input signal.

8.3.7.6. VCO

- Connect a voltmeter to test point Vcx.
- Set the TIME/DIV switch to position 0,2μs/div.
- Adjust C1213 for a voltmeter display of 400mV approx.
- Set the TIME/DIV switch to position 0,5μs/div.
- Check the voltage at test point Vcx to be 800mV approx.

8.3.8. Triggering

Trigger sensitivity

- Depress pushbutton Yx5 S16-B.
- Depress channel A ON-OFF pushbutton S32 to ON.
- Depress pushbutton AUTO of the trigger mode selector switch S29.
- Depress pushbutton RECURR S38-C.
- Set channel A AMPL/DIV switch S20 to position 0.2 V/div (40 mV/div on the screen and in the alpha-numeric display).
- Set TIME/DIV switch S23 to position 0.5 ms/div.
- Depress pushbutton A of the trigger source selector switch S39.
- Set LEVEL control R9 in its mid-position.
- Apply a sine-wave signal of 20 mVp-p –2 kHz to the channel A input socket X3.
- Adjust potentiometer **R2867** on unit A22 so that a triggered display is obtained.
- Remove the input signal.

Trigger slope and level

- Push SLOPE switch S27 to "+".
- Apply a sine-wave signal of 240 mVp-p – 2 kHz to the channel A input socket X3.
- Check that the display is triggered on the positive going edge of the signal and that the trigger point moves upwards when the LEVEL control R9 is turned clockwise.
- Pull SLOPE switch S27 to "–".
- Check that the display is triggered on the negative going edge of the input signal.
- Push SLOPE switch S27 again to "+".
- Depress pushbutton AC of the trigger mode selector switch S29.
- Rotate the LEVEL control R9 fully clockwise and anti-clockwise and check that in both extreme positions the trace is not triggered.
- Increase the signal amplitude of the input signal to 960 mVp-p.
- Rotate the LEVEL control R9 fully clockwise and anti-clockwise and check that in both extreme positions the trace remains triggered.
- Remove the input signal.

Trigger level AUTO

- Depress pushbutton AUTO of the trigger mode selector switch S29.
- Apply a sine-wave signal of 240 mVp-p – 100 Hz to channel A input socket X3.
- Rotate LEVEL control R9 and check that the trigger point can be shifted over 4 divisions.
- Remove the input signal.

Trigger level EXT

- Depress pushbutton AC of the trigger mode selector switch S29.
- Depress pushbutton EXT of the trigger source selector switch S39.
- Apply a sine-wave signal of 240 mVp-p – 100 Hz to channel A input socket X3.
- Apply a sine-wave signal of 3.2 Vp-p – 2 kHz to EXT input socket X6.
- Rotate LEVEL control R9 and check that the trigger point can be shifted over the total signal amplitude.

Trigger level EXT÷10

- Depress pushbutton EXT÷10 of the trigger source selector switch S39.
- Apply a sine-wave signal of 32 Vp-p – 2 kHz to EXT input socket X6.
- Rotate LEVEL control R9 and check that the trigger point can be shifted over the total signal amplitude.
- Remove the input signal.

Trigger sensitivities

- Depress pushbutton A of the trigger source selector switch S39.
- Apply a sine-wave signal to the channel A input socket X3 according to the table below.
- Set the TIME/DIV switch S23 to such a position that about ten sine-waves are displayed on the screen.
- Set the LEVEL control R9 for a stationary display.

– Check the trigger sensitivity in accordance with the table below.

TRIGGER MODE	INPUT FREQUENCY	AMPLITUDE
AUTO	100 Hz	0.75 div
	60 MHz	1.5 div
AC	20 Hz	0.75 div
	60 MHz	1.5 div
DC	10 Hz	0.75 div
	60 MHz	1.5 div
EXT	40 MHz	0.15 V
	60 MHz	0.3 V
EXT ÷ 10	40 MHz	1.5 V
	60 MHz	3 V

– Check the trigger sensitivity for EXT and EXT÷10 for l.f. and h.f. signals.
– Remove the input signal.
– Depress channel B ON-OFF pushbutton S34 to ON.
– Release channel A ON-OFF pushbutton S32 to OFF.
– Set channel B AMPL/DIV switch S22 to 0.2 V/div. (40 mV/div on the screen and in the alphanumeric display).
– Depress pushbutton B of the trigger source selector switch S39.
– Apply a sine-wave signal with an amplitude of 1,5 division – 60 MHz to the channel B input socket X4.
– Check that a triggered display is obtained.
– Remove the input signal.

Triggering at mains frequency

– Depress channel A ON-OFF pushbutton S32 to ON.
– Release channel B ON-OFF pushbutton S34 to OFF.
– Depress pushbutton AC of the trigger mode selector switch S29.
– Set TIME/DIV switch S23 to position 2 ms/div.
– Depress pushbuttons EXT and EXT÷10 of trigger source selector switch S39 simultaneously (LINE).
– Apply a mains voltage derived signal of 200 mVp-p via a transformer to the channel A input socket X3.
– Check that independent on the position of LEVEL control R9 a triggered display can be obtained.
– Remove the input signal.

T.V. triggering

– Depress pushbutton A of the trigger source selector switch S39.
– Depress pushbutton TVF of trigger mode selector switch S29.
– Apply a TV signal (CCIR norm - 625 lines - positive video - amplitude 0.5 division sync. pulse) to channel A input socket X3.
– Set TIME/DIV switch S23 to position 0.1 ms/div.
– Check that a triggered display is obtained with a frame pulse and an equalization pulse on the screen.
– Remove the TV signal.

Trigger delay adjustment

– Depress pushbutton AUTO of the trigger mode selector switch S29.
– Set TIME/DIV switch S23 to 10 ns/div.
– Set the TRIGGER DELAY alphanumeric display B21 to zero by pressing both pushbuttons UP and DIGIT S24 and S25 simultaneously (RESET).
– Apply a square-wave signal of 2 MHz, rise time $\leqslant$ 1 ns to channel A input socket X3.
– Check that the leading edge of the signal is visible on the screen.
– Set the number 100 in the alphanumeric display B21 with pushbuttons DIGIT and UP S25 and S24.
– Adjust potentiometer **R2910** on unit A22 so that the leading edge of the signal is again visible on the screen.
– Set the number 0 in the display B21 by pressing both pushbuttons UP and DIGIT S24 and S25 simultaneously.
– Remove the input signal.

Trigger delay

- Set TIME/DIV switch S23 to position 0.2 ms/div.
- Depress pushbutton DC of the trigger mode switch S29.
- Set the number 0002 in the alphanumeric display B21 with pushbuttons DIGIT (S25) and UP (S24) and set the pushbutton DIGIT (S25) to the least significant DIGIT (=2).
- Apply a square-wave voltage of 2 kHz to the channel A input socket X3.
- Set LEVEL control R9 for a triggered display.
- Set TIME/DIV switch S23 step by step to position 0,2 µs/div and check at each position that the beginning of the signal can be shifted in the screen by using pushbutton UP (S24).
- Set the TIME/DIV switch S23 to position 0,1 µs/div and check that the number in the alphanumeric display B21 is 100 (max. value in sampling mode).

Trigger control unit A5.

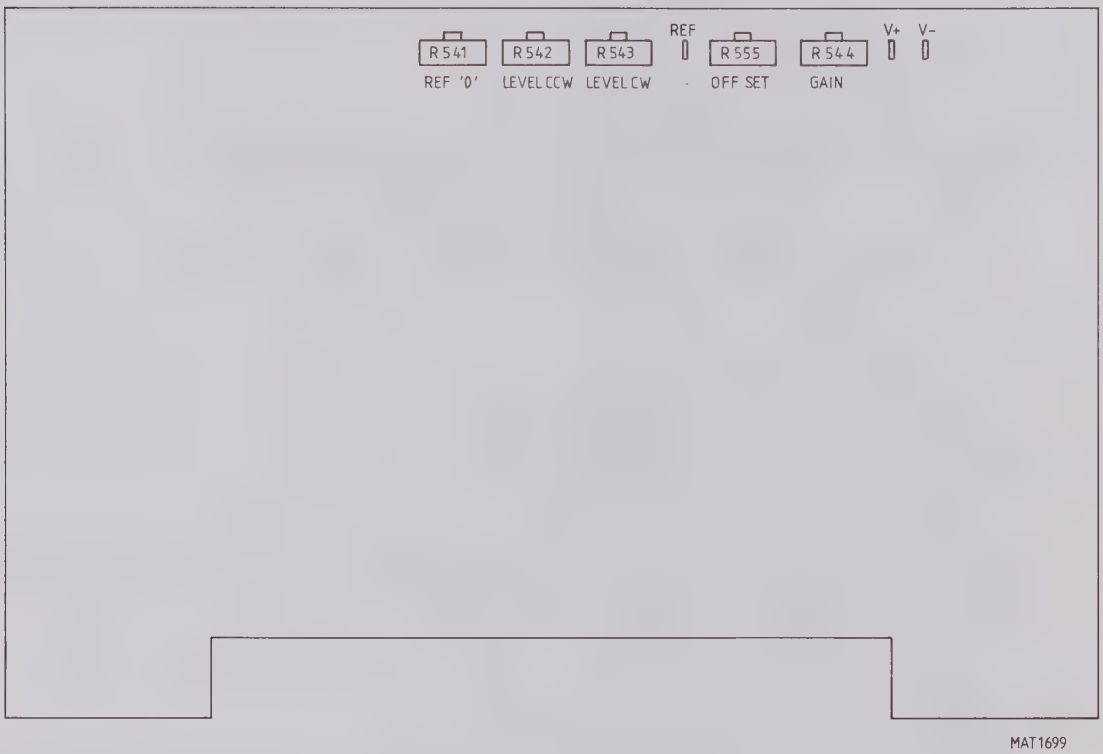

- Set R544 in the mid-position.
- Depress AUTO of the trigger mode selector switch S29.
- Set TIME/DIV switch S23 to 0,5 ms/div.
- Apply a sine-wave voltage of 2 kHz to the channel A input socket X3.
- Interconnect V+ and V−.
- Adjust V_{REF} to 0 V with R541 (Voltmeter between V_{REF} and earth).
- Disconnect V+ from V− and adjust R555 so that a triggered display is obtained with the LEVEL control in mid-position and a displayed signal of 0,5 div. The signal must be not triggered when the LEVEL control is completely clock-wise or counter clock-wise.
- Increase the input signal for 8 div display.
- Set the LEVEL control completely counter clock-wise.
- Turn R542 so that the display jitters (NOT TRIG'D lights up).
- Turn R542 in the opposite direction so that a stable display is obtained and then turn approx. 5° more.
- Set the LEVEL control completely clock-wise.
- Turn R543 so that the display jitters (NOT TRIG'D LED lights up).
- Turn R543 in the opposite direction so that a stable display is obtained and then turn approx. 5° more.
- Depress AC of trigger mode switch S29.
- Set the LEVEL control completely clock-wise and after that counter clock-wise. In both positions a well triggered display must be obtained.
- In case the previous point was not successful go to* and repeat the adjustings.

8.3.9. X-Y mode

- Depress the channel A and B ON-OFF pushbuttons S32 and S34 to ON.
- Depress the channel A and B pushbuttons "0" S31 and S35.
- Set the channel A and B AMPL/DIV switch S20 and S22 to 0.2 V/div.
- Set TIME/DIV switch S23 to position 0.5 μs/div.
- Set the channel A and B OFFSET controls R10 and R12 so that the spot is shifted to the centre of the screen.
- Release the channel A and B pushbuttons "0" S31 and S35.
- Depress pushbutton X = A/Y = B S15-B.
- Apply a sinewave signal of 240 mVp-p – 2 MHz to the channel A as well as the channel B input sockets X3 and X4.
- Check that a straight line is displayed with a angle of 45° with the positive horizontal axis.
- Check the same with TIME/DIV switch S23 in position 0.2 μs/div.
- Depress the channel A "0" pushbutton S31.
- Check that a vertical line is displayed.
- Remove the input signals.

8.3.10. Range indication

- Depress pushbutton X = t S15-A.
- Depress channel A (B) ON-OFF pushbutton S32 (S34) to ON.
- Release channel B (A) ON-OFF pushbutton S34 (S32) to OFF.
- Read the A (B) V/div. alphanumeric display B10 (B11) contents.
- Connect a probe with range indication to the channel A (B) input socket X3 (X4).
- Check that the indication in the A (B) V/div. alphanumeric display B10 (B11) is changed by a factor of 10.

8.3.11. Plotter outputs

- Store a square-wave signal of 1 div. in memory STO1.
- Select memory STO1 with SELECT pushbutton S14.
- Connect voltmeters to the plotter output sockets on the rear side of the instrument.
- Depress pushbutton PLOT S18 and check the following:
  1. X-OUT and Y-OUT are 0 Volt
  2. PENLIFT goes to 0 Volt
  3. X-OUT and Y-OUT are generating output signals
- Check that during plotting an intensified dot is visible on the screen.
- Depress pushbutton PLOT S18 again and check that the PLOT action is stopped.
- Remove the input signal.

8.3.12. Periodic and random deviations

These must be checked only with the cabinet plates fitted:

- Depress pushbutton RECURR S38-C.
- Set TIME/DIV switch S23 to position 1 ms/div.
- Depress channel A (B) ON-OFF pushbutton S32 (S34) to ON.
- Depress channel B (A) ON-OFF pushbutton S34 (S32) to OFF.
- Release the channel A and B pushbuttons "0" S31 and S35.
- Depress pushbuttons AC/DC of the input coupling controls S30 and S36 to AC.
- Set both AMPL/DIV switches S20 and S22 to positions 10 mV/div and the AMPL/DIV continuous controls R7 and R8 to their CAL positions.
- Depress pushbutton AUTO of the trigger mode switch S29.
- Check that ripple-noise-instability of the trace and microfony does not exceed 4 mm.

8.3.13. Effect of mains voltage variations

- Depress channel A ON-OFF pushbutton S32 to ON.
- Depress channel B ON-OFF pushbutton S34 to ON.
- Set channel A AMPL/DIV switch S20 to position 1 V/div.
- Set channel B AMPL/DIV switch S22 to position 1 V/div.
- Connect the CAL terminal x1 output signal with the channel A as well as the channel B input sockets X3 and X4.
- Vary the mains voltage by + and –10 %.
- Check that neither trace height nor trace width changes and that the brilliance remains the same.

8.4. ADJUSTMENT INTERACTIONS

Adjustment	Interaction
Power supply	Power supply
C.R.T. circuit	C.R.T. circuit
Balance adjustments vertical amplifier	Balance adjustment vertical amplifier
Trigger balance AC-DC	Trigger balance AC-DC
Trigger amplifier balance	Trigger amplifier balance
Trigger point symmetry	Trigger point symmetry
Final amplifier adjustments	Final amplifier adjustments
Vertical amplifier sensitivities	Vertical amplifier sensitivities
P^2CCD adjustments	P^2CCD adjustments
Input attenuators	Input attenuators
Square-wave response vertical channel	Square-wave response vertical channel
Time coefficients	Time coefficients
Trigger sensitivity	Trigger sensitivity
Trigger delay	Trigger delay

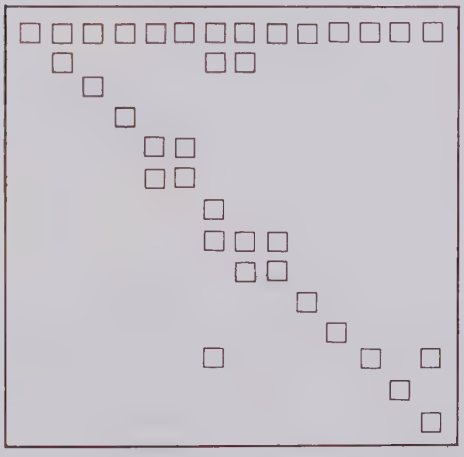

8.5. PERFORMANCE CHECK

8.5.1. General information

WARNING: Before switching on, ensure that the oscilloscope has been installed in accordance with the instructions outlined in chapter 2 of the operating manual, Installation Instructions.

This procedure is intended to be used for incoming inspection to determine the acceptability of newly purchased or recently recalibrated instruments.
It does not check every facet of the instrument's calibration; rather it is concerned primarily with those portions of the instrument which are essential to measurement accuracy and correct operation. Removing the instrument covers is not necessary to perform this procedure. All checks are made from the front panel.

If this test is started a few minutes after switching on, bear in mind that test steps may be out of specification, due to insufficient warming-up time. To avoid this situation, allow the specified warming-up time.

The performance checks are made with a stable, well-focused, low intensity display. Unless otherwise noted, adjust the intensity and trigger-level controls as needed.

Note 1: At the start of every check, the controls always occupy the preliminary settings; unless otherwise stated.
Note 2: The input voltage has to be supplied to the A-input; unless otherwise stated.
Note 3: Set the TIME/DIV switch to a suitable position; unless otherwise stated.

8.5.2. Preliminary settings of the controls

- Start this check procedure with **NO** input signals connected, **ALL** pushbuttons released and **ALL** switches in the CAL position.
- Depress the controls as indicated in figure below.

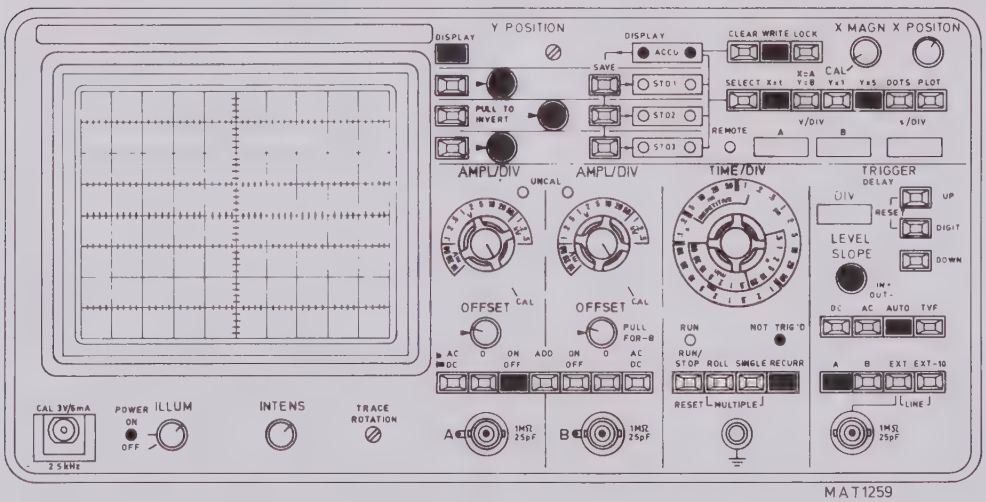

8.5.3. Recommended test equipment

Type of instrument	*Specifications*	*Example of recommended instrument*
Constant amplitude sine-wave generator	Freq. 200kHz ... 60MHz Constant amplitude of 12mVp-p ... 1.2Vp-p	Tektronix SG503 + SG504
Time marker generator	Repetition rate 0.5s ... 20ns	Tektronix TG501
Square-wave calibration generator	Rise time $<$ 200ns Voltage 10mV up to (for preference) 30V. Duty cycle 50% Rise time $\leqslant$ 1nsec.	Generator with additional attenuator unit. Partly PG506
L.F. sine-wave/square-wave generator	Sine-wave: 1Hz ... 1MHz/0 ... 30V Square-wave: 1Hz ... 1MHz/0 ... 30V Rise time $\leqslant$ 100ns	PM5129
Cables, T-piece, terminations for the generators	General Radio types for fast rise-time square-wave and high frequency sine-wave. BNC-types for other applications.	
Dummy probe 2 : 1	1MΩ $\pm$ 0.1% // 25pF	
Variable mains transformer	Well-insulated output voltage 90 ... 264V.a.c.	PHILIPS' ord. number 2422 529 00005
Moving-iron meter		

CHECKING PROCEDURE

STEP	OBJECTIVE	INPUT VOLTAGE	SETTINGS	REQUIREMENTS	MEASURING RESULTS
A.	**POWER ON + DISPLAY**				
A.1.	Start power on		Set the power on/off switch to ON	Starts at 180 V (Q-version: at 90 V) Pilot lamp POWER ON lights up	
A.2.	Current consumption			600 mA max. at 110 V 300 mA max. at 220 V	
A.3.	Illumination Intens Focus		Illumination potentiometer Intens potentiometer Intens potentiometer	Normal brightness adjusting Normal intens adjusting Automatic focus adjusting	
A.4.	Trace rotation			Line must be in parallel with horizontal graticule lines; if necessary, readjust potentiometer TRACE ROTATION	
B.	**VERTICAL SELECTIONS**				
B.1.	Channel control A (B)		Depress pushbutton ON of ch. A (ch. B)	Trace channel A (B) is visible on the screen	
B.2.	O-DC-AC control A (B)	Sine-wave signal, 2 kHz + DC offset to ch. A (ch. B)		Adjust the sine-wave amplitude so that the trace heigh is ca. 4 div.	
			Depress pushbutton O of ch. A (ch. B)	Set the trace in the centre of the screen	
			Release pushbutton O of ch. A (ch. B) Depress pushbutton AC of ch. A (ch. B)	Signal is visible on the screen, centre of the sine-wave is on the centre of the screen	
			Release pushbutton AC of ch. A (ch. B); eg. DC	Signal is visible on the screen, centre of the sine-wave is on DC-offset level.	
B.3.	ADD	Sine-wave signal, 2 kHz to ch. A and ch. B	Depress pushbutton ADD	Signal amplitude is the adding of ch. A + ch. B	
B.4.	Vertical trace height	Sine-wave signal 480 mVp-p 2 kHz	Ampl./Div. switch = 0,2 V/div. Depress Display ACCU; STO 1; STO 2 and STO 3 Depress SAVE STO 1; STO 2 and STO 3		
			Depress pushbutton Yx1	Max. signal amplitude = 2 div. all 4 signals are blinking at upper and lower top	
B.5.	Invert stores	As B.4.	As. B.4. Pull the INVERT switches of STO1, STO 2 and STO 3	Display of STO 1, STO 2 and STO 3 is inverted	
B.6.	Dot join	As B.4.	As. B.4. Depress pushbutton DOTS	Signals are built up by dots	
C.	**VERTICAL CHANNELS**				
C.1.	Vertical gain A (B)	Square-wave signal 240 mVp-p 2 kHz to ch. A (ch. B)	AMPL/DIV switch = 0,2 V/div. Depress pushbutton Yx1 Depress pushbutton Yx5	Trace height = 1,2 div. ± 3% (± 0,2 subdiv.) Trace height = 6 div. ± 5% (± 1,5 subdiv.)	
C.2.	AMPL/DIV positions	Square-wave signal, freq. 2 kHz to ch. A (ch. B)	AMPL/DIV switch position:		
		Ampl: 12 mV p-p 24 ,, 60 ,, 120 ,, 240 ,, 600 ,, 1,2 Vp-p 2,4 ,, 6 ,, 12 ,, 24 ,, 60 ,,	10 mV/div. 20 ,, 50 ,, 0,1 V/div. 0,2 ,, 0,5 ,, 1 ,, 2 ,, 5 ,, 10 ,, 20 ,, 50 ,,	Trace height = 6 div. ± 5% (± 1,5 subdiv.)	

STEP	OBJECTIVE	INPUT VOLTAGE	SETTINGS	REQUIREMENTS	MEASURING RESULTS
C.3.	Continue range A (B)	Square-wave signal 240 mV - 100 Hz to ch. A (ch. B)	Continue potentiometer ↶	Continue range 1:>2,5 Pilot lamp "UNCAL" lights up	
C.4.	Vertical deflection A (B) via dummy 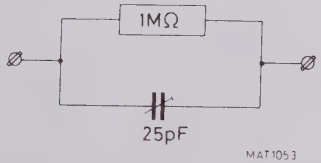 	Square-wave signal, freq. 10 kHz to ch. A (ch. B)	AMPL/DIV switch position:		
		Ampl.: 48 mVp-p 480 " 4,8 Vp-p 48 "	20 mV/div. 0,2 V/div. 2 " 20 "	Trace height = 6 div. ± 5% (± 1,5 subdiv.)	
C.5.	Square-wave response (A, B and – B)	Square-wave signal, 240 mVp-p, 1 MHz, risetime ⩽ 1 nsec. to ch. A (ch. B)	AMPL/DIV switch = 0,2 V/div. (for – B: pull the PULL FOR – B switch)	Pulse abberations ± 3%, risetime ⩽ 6 nsec.	
C.6.	Visible signal delay	As C.5.	AMPL/DIV switch = 0,2 V/div. TIME/DIV switch = 10 ns/div.	Visible signal delay > 10 nsec. NOTE: remember the value for point E.7	
C.7.	Bandwidth A (B)	Sine-wave signal to ch. A (ch. B) 1 MHz	Set the TIME/DIV switch so that always about 10 periods are displayed.	Adjust the sine-wave amplitude so that the trace height = 6 div.	
		1 MHz - 60 MHz		Trace height ⩾ 4,2 div.	
C.8.	Offset control range A (B)	Sine-wave signal 1,2 Vp-p, 2 MHz to ch. A (ch. B)	AMPL/DIV switch = 0,2 V/div. OFFSET control of ch. A (ch. B) ↶ or ↷	Sine-wave signal out of the screen	
C.9.	Common mode rejection A and – B	Sine-wave signal 960 mVp-p, 2 MHz to ch. A and ch. B	AMPL/DIV switch = 0,2 V/div. Depress push-button ADD Pull the PULL FOR – B switch	Rejection > 100 (signal < 0,25 div.)	

STEP	OBJECTIVE	INPUT VOLTAGE	SETTINGS	REQUIREMENTS	MEASURING RESULTS
D.	TIME BASE				
D.1.	Time coëfficients	Square wave signal to ch. A	TIME/DIV switch position:		
	– Recurrent	Repetition time:		Coëfficient error ± 2% (c.i.0,2 div. over 10 div. screenwith) (Combined with magnifier: coëfficient error ± 4%)	
		5 nsec	5 nsec/div.		
		10 nsec	10 nsec/div.		
		20 nsec	20 nsec/div.		
		50 nsec	50 nsec/div.		
		0,1 μsec	0,1 μsec/div.		
		0,2 μsec	0,2 μsec/div.		
		0,5 μsec	0,5 μsec/div.		
		1 μsec	1 μsec/div.		
		2 μsec	2 μsec/div.		
		5 μsec	5 μsec/div.		
		10 μsec	10 μsec/div.		
		20 μsec	20 μsec/div.		
		50 μsec	50 μsec/div.		
		0,1 msec	0,1 msec/div.		
		0,2 msec	0,2 msec/div.		
		0,5 msec	0,5 msec/div.		
		1 msec	1 msec/div.		
		2 msec	2 msec/div.		
		5 msec	5 msec/div.		
		10 msec	10 msec/div.		
		20 msec	20 msec/div.		
		50 msec	50 msec/div.		
		0,1 sec	0,1 s/div.		
		0,2 sec	0,2 s/div.		
	– Roll		Depress pushbutton ROLL Start every action with RUN		
		0,5 sec	0,5 s/div.	Coëfficient error ± 2% (c.i.0,2 div. over 10 div. screenwith) During action pilot lamp "RUN" lights up After action pilot lamp "RUN" flashes	
		1 sec	1 s/div.		
		2 sec	2 s/div.		
		5 sec	5 s/div.		
		10 sec	10 s/div.		
		20 sec	20 s/div.		
		0,5 min(30 sec)	0,5 min/div.		
		1 min(60 sec)	1 min/div.		
		2 min(120 sec)	2 min/div.		
		6 min(360 sec)	6 min/div.		
		15 min(900 sec)	15 min/div.		
		30 min(1800 sec)	30 min/div.		
		60 min(3600 sec)	60 min/div.		
D.2.	Variable X-magn. range	Square-wave signal, to ch. A repetition time 10 msec	TIME/DIV switch position 1 ms/div.	X-magnifier range = $1 \geqslant 2{,}5$	
D.3.	Single shot	Square-wave signal, 1 kHz to ch. A	TIME/DIV switch position 1 ms/div. Depress pushbutton SINGLE Depress pushbutton Yx1 Start every action with RUN	ACCU is refreshed and during the single shot action the pilot lamp "NOT TRIG'D" lights up	
D.4.	Multiple	As D.3.	TIME/DIV switch position 1 ms/div. Depress pushbuttons ROLL, and SINGLE (c.i.MULTIPLE) Depress Display ACCU; STO 1; STO 2 and STO 3 Depress pushbutton Yx1 Start every action with RUN	ACCU, STO 1, STO 2 and STO 3 are refreshed and during the Multiple action the pilot lamp "NOT TRIG'D" lights up	

STEP	OBJECTIVE	INPUT VOLTAGE	SETTINGS	REQUIREMENTS	MEASURING RESULTS
E.	**TRIGGERING**			*(NOTE: If signal triggers the pilot lamp "NOT TRIG'D" is extinguished)*	
E 1.	Sensitivity A (B)	Sine-wave signal to ch. A (ch. B) frequency	Depress pushbutton A (B)		
		100 Hz	Depress pushbutton AUTO	Signal triggers at 0,75 div.	
		20 Hz	Depress pushbutton AC	Signal triggers at 0,75 div.	
		10 Hz	Depress pushbutton DC	Signal triggers at 0,75 div.	
		40 MHz		Signal triggers at 0,75 div.	
		60 MHz		Signal triggers at 1,5 div.	
E.2.	Sensitivity EXT	Sine wave signal to EXT frequency	Depress pushbutton EXT		
		40 MHz	Depress pushbutton DC	Signal triggers at 0,15 Vp-p	
		60 MHz		Signal triggers at 0,3 Vp-p	
	EXT÷10	40 MHz	Depress pushbutton EXT÷10	Signal triggers at 1,5 Vp-p	
		60 MHz		Signal triggers at 3 Vp-p	
E.3.	Slope	Sine-wave signal 240 mVp-p, 2 kHz to ch. A	AMPL/DIV switch = 0,2 V/div.	Signal triggers on positive going edge	
			Pull the SLOPE switch	Signal triggers on negative going edge	
E.4.	Level range	As E.3.	Depress AUTO LEVEL control	Trace is triggered in the most extreme positions of the LEVEL control	
			Depress pushbutton AC LEVEL control	Trace is not triggered in the most extreme positions of the LEVEL control	
			Depress pushbutton DC LEVEL control	Trace is not triggered in the most extreme positions of the LEVEL control	
		Increase the sine-wave signal to 3,2 Vp-p, 2 kHz	LEVEL control	Trigger point can be shifted over the total signal amplitude.	
E.5.	T.V. triggering	T.V. signal according to C.C.I.R. (625 lines), ampl. sync.pulse = 0,5 div.p-p	Depress pushbutton TVF	Signal triggers	
E.6.	Display range trigger delay		If necessary, depress push-button UP, DOWN or DIGIT		
			TIME/DIV switch = 1 ms/div.	Display range is – 9 ... 9999 div.	
			TIME/DIV switch = 0,2 µs/div.	Display range is 0 ... 100 div.	
E.7.	Accuracy trigger delay	Square-wave signal, repetition time = 0,1 msec to ch. A	TIME/DIV switch = 20 µs/div.		
			Trigger delay = 0000	Accuracy = 0	
			Trigger delay = 1900	Accuracy = ± 2 mm (1 subdiv.)	
			Trigger delay = 9999	Accuracy = 0,01% (for 9999 : 1 div.) *NOTE: Wait for a trigger pulse !*	
		Square-wave signal, repetition time = 1 µsec to ch. A	TIME/DIV switch = 0,2 µs/div.		
			Trigger delay = 0000	Accuracy = 0	
			Trigger delay = 0100	Accuracy = ± 2 div. + visible delay (for visible delay, see point C.7.)	
F.	**X-Y Mode**	Sine-wave signal, 240 mVp-p, 2 MHz to ch. A and ch. B	Depress pushbutton ON of ch. A and ch. B Depress pushbutton X=A, Y=B Set the ch. A and ch. B AMPL/DIV switches to 0,2 V/div.	– A line is visible with an angle of 45° with the horizontal axis – Amplitude of X-defl. and Y-defl. is ⩾ 5,7 div. – Distance between lines in centre of signal ⩽ 0,04 div. 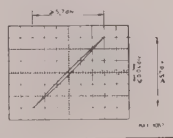	
G.	**Plotter outputs**	Sine-wave voltage, 480 mVp-p, 2 kHz to ch. A	AMPL/DIV switch = 0,2 V/div. Depress pushbutton PLOT	Check that the plot action starts by depressing pushbutton PLOT Plottime ≈ 100 sec During plot penlift = 100 V X-out = 1 V max. Y-out = 1 V max intensified dot is visible on the screen	
H.	**Calibration**			Calibration voltage - 3 Vp-p Calibration frequency 2,5 kHz	

9. CORRECTIVE MAINTENANCE

9.1. REPLACEMENTS

WARNING: **The opening of covers or removal of parts, except those to which access can be gained by hand, is likely to expose live parts, and also accessible terminals may be live.**
The instrument shall be disconnected from all voltage sources before any adjustment, replacement or maintenance and repair during which the instrument will be opened.
If afterwards any adjustment, maintenance or repair of the opened instrument under voltage is inevitable, it shall be carried out only by a qualified person who is aware of the hazard involved.
Bear in mind that capacitors inside the instrument may still be charged even if the instrument has been separated from all voltage sources.

Standard parts

Electrical and mechanical replacement parts can be obtained through your local Philips organisation or representative. However, many of the standard electronic components can be obtained from other local suppliers.
Before purchasing or ordering replacement parts, check the parts list for value tolerance, rating and description.

Note: Physical size and shape of a component may affect instrument performance, particularly at high frequencies. Always use direct-replacement components, unless it is known that a substitute will not degrade instrument performance.

Special parts

In addition to the standard electronic components, some special components are used.
These components are manufactured or selected by Philips to meet specific performance requirements.

Transistors and integrated circuits

Transistors and I.C.'s (integrated circuits) should not be replaced unless they are actually defective. If removed from their sockets during routine maintenance return them to their original sockets. Unnecessary replacement or switching of semiconductor devices may affect the calibration of the instrument. When a transistor is replaced, check the operation of the part of the instrument that may be affected. (see interaction table 8.4.)

WARNING: Handle silicone grease with care. Avoid getting silicone grease in the eyes. Wash hands thoroughly after use.

Any replacement component should be of the original type or a direct replacement. Bend the leads to fit the socket and cut the leads to the same length as on the component being replaced.

9.1.1. Replacing single knobs

- Prise off cap A.
- Slacken screw (or nut) B.
- Pull the knob from the spindle.

When fitting a knob or cap, ensure that the spindle is in a position which allows reference lines to be coincident with the markings on the text plate of the oscilloscope.

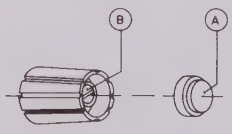

MAT 163

9.1.2. Replacing double knobs

- Prise off cap A and slacken screw B.
- Pull the inner knob from the spindle.
- Slacken nut C and pull the outer knob from the spindle.

When fitting a knob or cap, ensure that the spindle is in a position which allows reference lines to be coincident with the markings on the text plate of the oscilloscope.

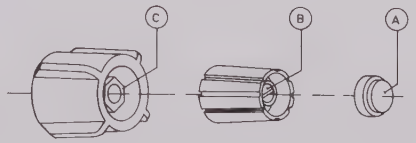

MAT 163

9.1.3. Replacing carrying handle

1. Remove both the upper and lower cabinet plates after slackening the four quick-release fasteners at the corners of each plate. To prevent the fasteners coming apart, do not slacken more than two turns.
2. Remove the plastic strip which is snapped on to the grip.
3. Remove the four screws which secure the grip to the brackets (these screws have been locked with a sealing varnisch).
4. Depress the push-buttons in the brackets and turn the carrying handle as far as possible to the upper side of the oscilloscope.
5. Keep the push-button of the right-hand bracket depressed and pull the bracket from its bearing 1).
6. Remove the grip from the remaining bracket.
7. Depress the push-button of the left-hand bracket and turn the latter as far as possible to the lower side of the instrument.
8. Keep the push-button depressed and pull the bracket from its bearing.

If it is impossible to remove the left-hand bracket in this way, remove also its bearing in a similar way as described in footnote 1).

1) With some instruments it may be impossible to remove the handle in the described way. This is due to an extra securing plate in the right-hand bearing. In that case, DO NOT USE FORCE, but work in accordance with the following procedure which replaces points 3, 4 and 5.

   3. Remove the two screws which secure the grip to the right-hand bracket.
   4. Remove the two hexagonal bolts which secure the right-hand bearing to the side strip.
   5. Depress the push-button of the right-hand bracket and take the bearing from the bracket.

9.1.4. Removing the cabinet plates and the screen bezel

Both upper and lower cabinet plate can be removed after slackening one or two turns the four quick release fasteners at the corners of each plate. Do not slacken the fasteners more than two turns, otherwise they may come apart.

The screen bezel can be detached by pressing the longer edges and pulling out.

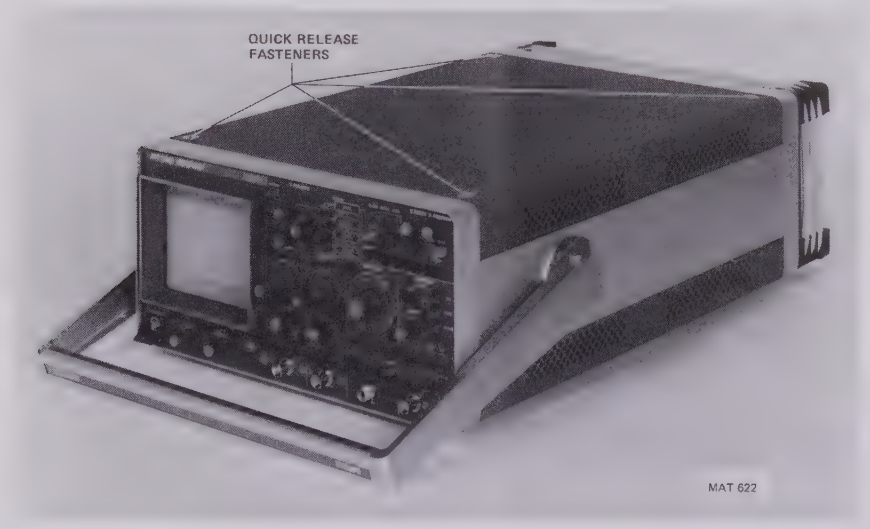

Fig. 9.1.1.

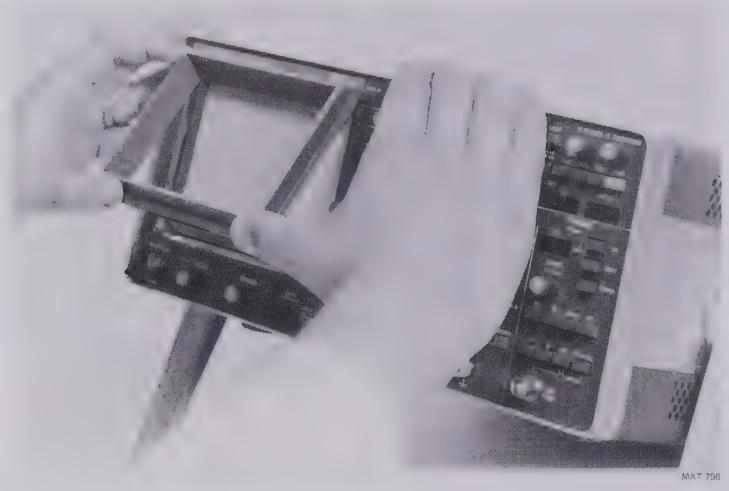

Fig. 9.1.2.

9.1.5. Replacing the plug-in units

The plug-in units are:

A4 – microprocessor unit
A5 – Trigger control unit
A6 – RAM unit
A7 – buffer unit
A8 – conversion unit
A9 – ACL unit
A10 – CCD logic unit
A12 – time-base unit
A13 – delay trigger unit
A14 – IEC bus interface (if available)
A20 – final amplifier unit

These circuit boards can be easily removed after disconnecting the various cables.
Unit A10 can only be removed after slackening the screw at the upper right side of the unit which secures the heatsinks to the metal spport.

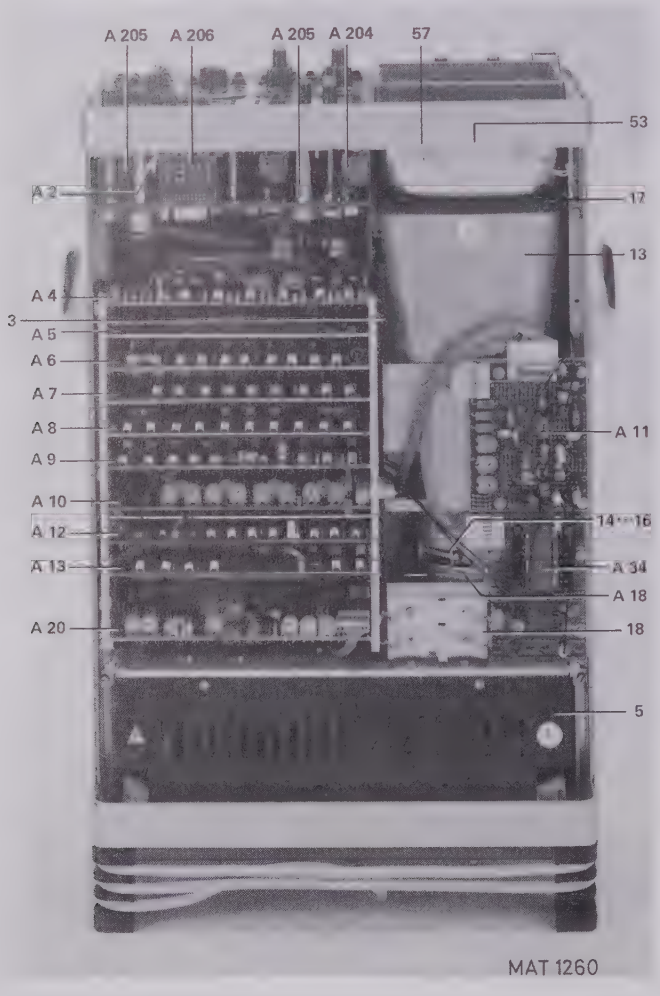

Fig. 9.1.3.

9.1.6. Replacing the P²CCD unit A11

This unit A11 is located at the upper left side of the instrument above the C.R.T.

- Remove the four miniature coaxial plugs from unit A10.
- Remove the multipole connector from unit A10.
- Remove the two miniature coaxial plugs from unit A11.
- The unit can be removed after unscrewing the two screws which secure the unit to the side frame.

ATTENTION: The P²CCD is a highly sensitive MOS circuit. Upon delivery of a spare unit the miniature coaxial plugs are interconnected so that no static charge can influence the circuit.
Moreover the multipole connector is short circuited by a conductive plastic foam material.
When mounting a new unit, first secure the unit mechanically to the side frame.
After having taken the precautions as described in chapter 9.3. remove the conductive plastic foam of the multipole connector and plug it in the CCD logic unit.
After that, the miniature coaxial connectors may be disconnected and connected to the right connectors one by one.

9.1.7. Replacing the front unit A2

- Remove the screen bezel and the contrast plate.
- Remove all the knobs except the pushbutton knobs.
- Remove the textplate with the two screws underneath the channel A AMPL/DIV switch and the TIME/DIV switch.
- Remove the four screws as indicated in the figure.

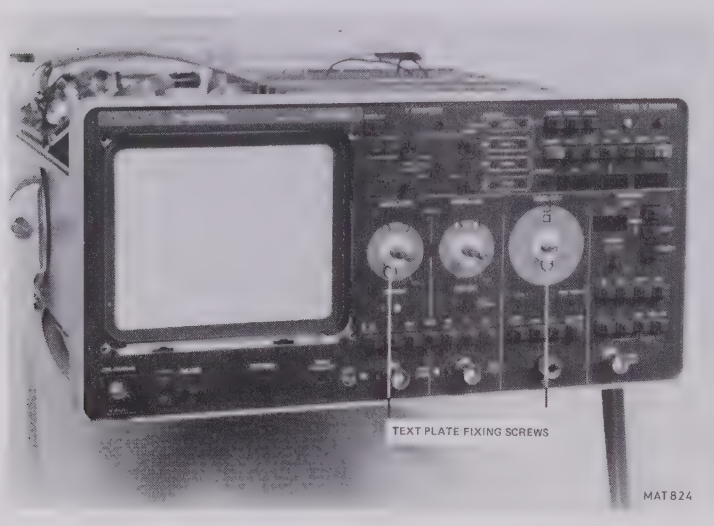

Fig. 9.1.4.

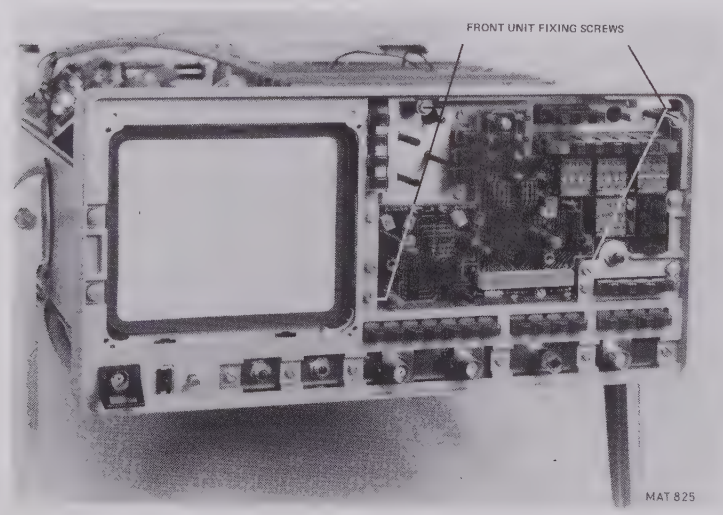

Fig. 9.1.5.

- Remove plug in unit A4.
- Disconnect the two multipole connectors on the motherboard unit A3 which are situated behind the front unit.
- Press the front unit to the rear by pushing the connector which is mounted underneath the TIME/DIV switch.
- Carefully remove the unit out of the instrument.
- When mounting again, carefully insert the front unit into the instrument.
- Be sure that the bottom of the unit is completely outlined with the connector on the motherboard.
- Carefully press the front unit into the connector.
- Fix the unit, the textplate and the knobs again in the reversed sequence.
- Plug in the microprocessor unit A4.
- Plug in the two multipole connectors.

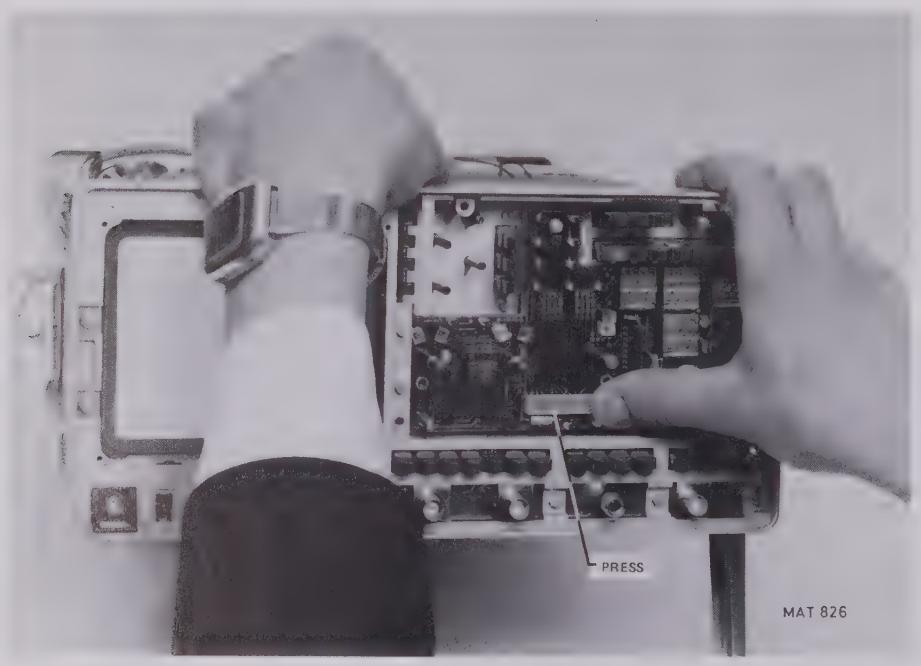

Fig. 9.1.6.

9.1.8. Replacing the LEVEL control

- Remove the front unit A2.
- Unsolder the wires on the potentiometer.
- Unscrew the potentiometer.

9.1.9. Replacing the trigger mode selector switch

- Remove the front unit A2.
- Unsolder the interconnection wire between the LEVEL potentiometer and the switch.
- Remove the two slot headed screws on the front that fixes the switch.

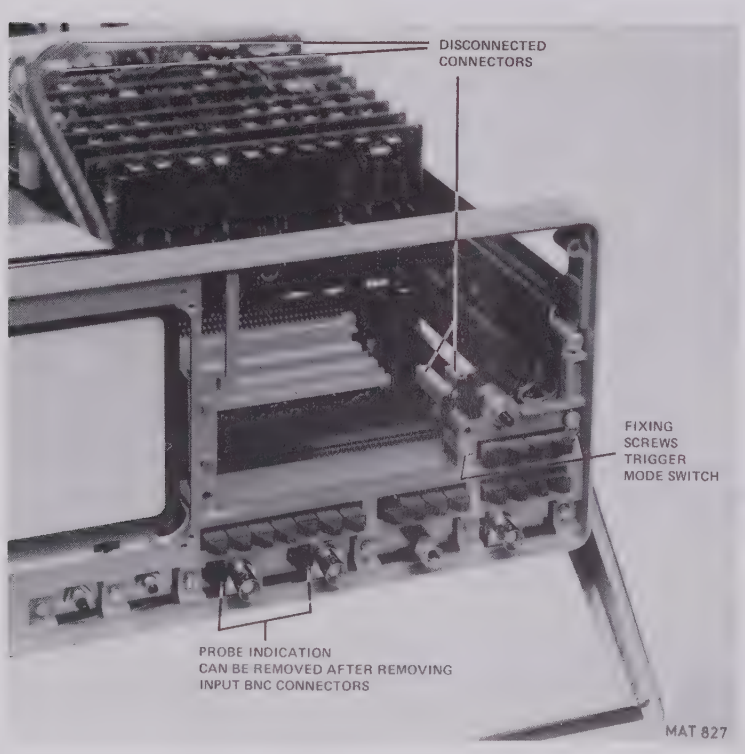

Fig. 9.1.7.

9.1.10. Replacing the C.R.T.

WARNING: Handle the C.R.T. carefully. Rough handling or scratching can cause the C.R.T. to implode.

- Remove the upper and lower instrument cabinet plate.
- Remove the bezel and the contrast plate.
- Remove the two screws that secure the upper scale illumination lamps support to the front panel and remove this support.
- Disconnect the two connectors on the C.R.T. socket from the power supply unit (A15) and the final amplifier unit (A20).
- Unsolder the red and yellow TRACE ROTATION wire from the support in the front underneath the C.R.T.
- Loosen the screw of the clamping bracket around the C.R.T. neck (accessible via the hole in the C.R.T. screen).
- Carefully withdraw the C.R.T. partly through the front panel of the instrument.
- Disconnect the EHT cable from the C.R.T. and discharge the cable and the C.R.T.
- Remove the C.R.T. and take care of the C.R.T. socket wiring.
- Remount the new C.R.T. in the reversed sequence.
- If the rubber sleeve around the neck of the C.R.T. must be slid over the neck of a replacement tube, the use of industrial talcum powder is strongly recommended, to prevent the rubber sleeve from sticking on the C.R.T. neck.

9.1.11. Replacing the DELAY LINE UNIT A18

The delay line can be removed after removing the C.R.T. (see section 9.1.10.).

- Remove the C.R.T.
- Disconnect the delay line connections from the vertical amplifier unit (A21) by removing two screws and pulling four miniature plugs.
- The delay line unit itself can be removed by removing the screw of its support bracket which is visible after the C.R.T. is removed.

9.1.12. Removing the rear plate together with the AC POWER UNIT A16

- Remove the six slot headed screws which secure the rear panel.
- Pull out the rear panel.
- Disconnect the three cables and the miniature coaxial plug.
- Unscrew the six screws that secure the unit to the rear panel.

9.1.13. Removing the DC POWER UNIT A15

- Remove the rear panel.
- Remove the internal upper and lower black metal screening plates (2 screws each).
- Disconnect all the seven multipole connectors.
- Unsolder the EHT unit cable and discharge the cable.
- Remove the unit after unscrewing the seven screws that secure the unit to the chassis.

9.1.14. Removing the mains filter

- Remove the rear panel.
- Remove the internal lower black metal screening plate (2 screws).
- Remove the screw that secures the mains filter to the chassis.

9.1.15. Removing the EHT unit A23

- Remove the rear panel.
- Unsolder the EHT unit cable.
- Remove the C.R.T. partly and disconnect and discharge the EHT cable.
- Remove the EHT unit after unscrewing the two ALLEN-screws that fix the unit to the chassis.

9.1.16. Removing the vertical amplifier unit A21

- Remove the three multipole connectors.
- Remove the screening plate from the unit.
- Remove the eight miniature coaxial sockets.
- Remove the delay line connections (see 9.1.11).
- Unsolder the two groups of connections to the trigger unit A22.
- Disconnect the wires which connect the unit to the input sockets A and B and unscrew the screws that secure the unit to these sockets.
- Remove the front panel POWER ON/OFF knob and the plastic axis which is connected to the switch and potentiometer at the rear of the instrument.
- Remove the textplate
- Remove the complete unit after unscrewing twelve screws.

9.1.17. Removing trigger unit A22

- Disconnect all the three multipole connectors from the unit.
- Disconnect the five miniature coaxial plugs from the unit.
- Unsolder the wires that connect the front panel input socket EXT to the unit.
- Unsolder the two groups of connections between this trigger unit and amplifier unit A20.
- Remove the textplate
- The unit can be removed now after unscrewing five screws.

9.2. SOLDERING TECHNIQUES

Working method:

- Carefully unsolder one after the other the soldering tags of the semi-conductor.
- Remove all superfluous soldering material. Use a sucking iron or sucking copper litze wire.
- Check that the tags of the replacement part are clean and pre-tinned on the soldering places.
- Locate the replacement semi-conductor exactly on its place, and solder each tag to the relevant printed conductor on the circuit board.

Note: Bear in mind that the maximum permissible soldering time is 10 seconds during which the temperature of the tags must not exceed 250 deg C. The use of a solder with a low melting point is therefore recommended.

Take care not damage the plastic encapsulation of the semi-conductor.

ATTENTION: When you are soldering inside the instrument it is essential to use a low-voltage soldering iron, the tip of which must be earthed to the mass of the oscilloscope.

Suitable soldering irons are:

- ORYX micro-miniature soldering instrument, type 6A, voltage 6 V, in combination with PLATO pin-point tip type 0-569.
- ERSA miniature soldering iron, type minor 040 B, voltage 6 V.
- Low Voltage Mini Soldering Iron, Type 800/12 W - 6 V, power 12 W, voltage 6 V, order no. 4822 395 10004, in combination with 1 mm-pin-point tip, order no. 4822 395 10012.

Ordinary 60/40 solder and 35- to 40-watt pencil-type soldering iron can be used to accomplish the majority of the soldering. If a higher wattage-rating soldering iron is used on the etched circuit boards, excessive heat can cause the etched circuit wiring to separate from the board base material.

9.3. HANDLING MOS DEVICES

Though all our MOS integrated circuits incorporate protection against electrostatic discharges, they can nevertheless be damaged by accidental over-voltages. In storing and handling them, the following precautions are recommended.

Caution

Testing or handling and mounting call for special attention to personal safety. Personnel handling MOS devices should normally be connected to ground via a resistor.

Storage and transport

Store and transport the circuits in their original packing. Alternatively, use may be made of a conductive material or special IC carrier that either short-circuits all leads or insulates them from external contact.

Testing or handling

Work on a conductive surface (e.g. metal table top) when testing the circuits or transferring them from one carrier to another. Electrically connect the person doing the testing or handling to the conductive surface, for example by a metal bracelet and a conductive cord or chain. Connect all testing and handling equipment to the same surface.
Signals should not be applied to the inputs while the device power supply is off. All unused input leads should be connected to either the supply voltage or ground.

Mounting

Mount MOS integrated circuits on printed circuit boards *after* all other components have been mounted. Take care that the circuits themselves, metal parts of the board, mounting tools, and the person doing the mounting are kept at the same electric (ground) potential. If it is impossible to ground the printed-circuit board the person mounting the circuits should touch the board before bringing MOS circuits into contact with it.

Soldering

Soldering iron tips, including those of low-voltage irons, or soldering baths should also be kept at the same potential as the MOS circuits and the board.

Static charges

Dress personnel in clothing of non-electrostatic material (no wool, silk or synthetic fibres). After the MOS circuits have been mounted on the board proper handling precautions should still be observed.
Until the sub-assemblies are inserted into a complete system in which the proper voltages are supplied, the board is no more than an extension of the leads of the devices mounted on the board. To prevent static charges from being transmitted through the board wiring to the device it is recommended that conductive clips or conductive tape be put on the circuit board terminals.

Transient voltages

To prevent permanent damage due to transient voltages, do not insert or remove MOS devices, or printed-circuit boards with MOS devices, from test sockets or systems with power on.

Voltage surges

Beware of voltage surges due to switching electrical equipment on or off, relays and d.c. lines.

9.4. SPECIAL TOOLS

Special tool for the slotted nut of the ACCU POSITION and XMAGN potentiometers, ordering number 5322 395 54024.

For those who want to make such a tool, we give a sketch with the dimensions in mm.
The material is silversteel N094, tempered 40-45 RC.

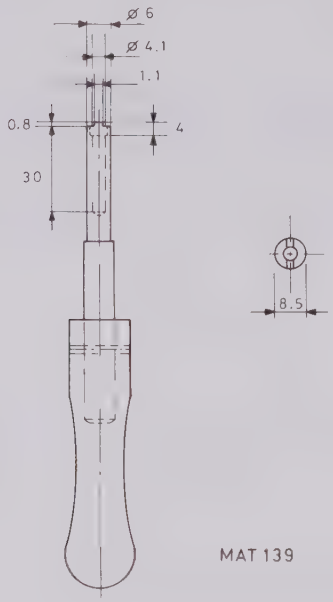

Fig. 9.4.1.

Extension card for plug-in units

To measure plug-in units of this oscilloscope an extension card is necessary.
Most components can be reached by the use of one extension card.
Complete access to all parts is possible by the use of two extension cards, but the wiring of some of the units is not long enough than.
Ordering number 5322 263 74144.

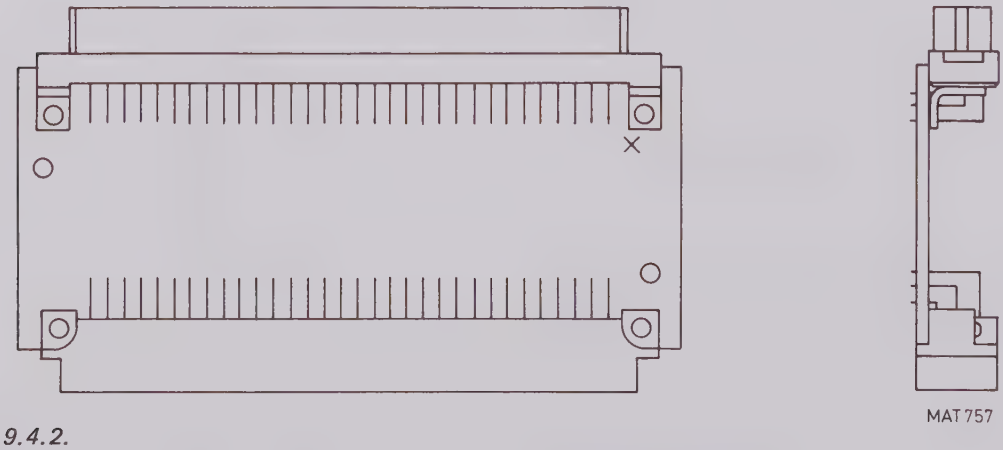

Fig. 9.4.2.

9.5. RECALIBRATION AFTER REPAIR

After any electrical component has been replaced the calibration of that particular circuit should be checked, as well as the calibration of other closely related circuits.
Since the power supply affects all circuits, calibration of the entire instrument should be checked if work has been done in the power supply or if the transformer has been replaced (see interaction table 8.4).

9.6. INSTRUMENT REPACKAGING

If the instrument is to be shipped to a Service Centre for service or repair, attach a tag showing owner (with address) and the name of an individual at your firm that can be contacted. The Service Centre needs the complete instrument serial number and a fault description.

Save and re-use the packing in which your instrument was shipped. If the original packing is unfit for use or not available, repack the instrument in such a way that no damage during transport occurs.

9.7. TROUBLE SHOOTING

9.7.1. Introduction

The following information is provided to facilitate trouble shooting. Information contained in other sections of this manual should be used along with the following information to aid in locating the defective component. An understanding of the circuit operation is helpful in locating faults, particularly where integrated circuits are used. See chapter 6 for this information.

9.7.2. Power-up routine

When switching-on the instrument, note that the built-in microprocessor initiates an automatic test of a number of internal circuits including:

- Start test
- PROM test
- LED display test
- RAM test

The sequence and explanation of this power-up routine is as follows:

a) Start test
- Check that about 2 seconds after switching on, pilot lamps REMOTE, RUN, and NOT TRIG'D are ON
- Check that all other pilot lamps and scale lamps are OFF.

This is a visual check only. After this, the next test starts directly.

b) PROM test
This is a check-sum test of all the internal PROM circuits. PROMs 1 to 4 are checked in turn starting with PROM 1.

PROM 1

DISPLAY	SELECT
● ACCU	●
○ STO1	○
○ STO2	○
○ STO3	○

- Check that the ACCU display and select lamps switch ON.

If a fault is found the test sequence stops and no other test is made.
When no fault is found, the next test starts

PROM 2

DISPLAY	SELECT
● ACCU	●
● STO 1	●
○ STO 2	○
○ STO 3	○

- Check that the STO1 display and select lamps also switch ON.

If a fault is found the test sequence stops and no other test is made.
Following a valid test result, the next test starts.

PROM 3

DISPLAY	SELECT
● ACCU	●
● STO 1	●
● STO 2	●
○ STO 3	○

- Check that the STO2 display and select lamps lamps also switch ON.

If a fault is found the test sequence stops and no other test is made.
Following a valid test result, the last PROM test starts.

PROM 4	DISPLAY	SELECT	
	● ACCU	●	– Check that the STO3 display and select lamps also switch ON.
	● STO1	●	
	● STO2	●	
	● STO3	●	If a fault is found the test sequence stops and no other test is made. Following a valid test result, the RAM test will start.

c) LED-display test
Each segment of all the LED-display sections will be switched ON, so that the character will be shown in every section.

All the pilot lamps and scale lamps on the front panel will be switched ON. In this way, the LED-displays and the indicator lamps can be visually checked.
After about 3 seconds the next test is executed.

d) RAM test
This test checks only the micro-processor RAM and not the RAM memories ACCU, STO1, STO2 and STO3.
The RAM part, of which the contents may be destroyed, is now checked by writing and reading a particular pattern.
If a fault is found, the system will stop. If no fault is detected, this RAM part will be cleared.
The RAM part, in which the settings of the channel A and channel B AMPL/DIV switches, the TIME/DIV switch and the trigger delay and their check-sums are stored, may not be destroyed when using the battery back-up facility.
This RAM part will be check-sum tested (in the same way as the PROMS), and cleared when a fault is found (NOP will then be displayed in the alpha-numeric display).

Summary: If the tested circuits are working correctly, all tests will run through in an uninterrupted sequence and after the last test the instrument is ready for use.
In the event of a fault, the test sequence will stop at the point of fault detection.
The test sequence will still continue if a failure occur in one of the pilot lamps or in the alpha-numeric displays.

9.7.3. Trouble shooting aids

Print lay-out and circuit diagrams

The instrument contains a number of functional units. For each of these units a complete detailed circuit diagram and a complete detailed print lay-out drawing is given.

Printed-circuit board lay-out drawings are printed on foldout pages on the left and circuit diagrams are printed on foldout pages on the right, next to each other.
These drawings are located behind the detailed circuit description of the relevant unit.

Electrical values or types of the used components or the component item numbers are shown on the circuit diagram. For the used types of integrated circuits a table is provided.

Each component which is shown on the circuit diagram is marked on the print lay-out drawing by its item number.

Red symbols ▽ on the circuit diagrams are indicating the testpoints which are available on the circuit boards.

Red symbols ○ on the circuit diagrams are indicating all the adjusting elements.

Red symbols □ on the circuit diagrams are giving additional information.

For each integrated circuit and for all the connectors and transformers the pin configuration is given on the circuit diagram.

On the left side of the circuit diagram a part of the print connector is drawn which is giving the connector pin numbers of the incoming signals.
The part of the connector with the outgoing signals and their connector numbers is drawn on the right side of the circuit diagram.

Circuit description

Circuit descriptions (section 6) can be found in the manual in unit number sequence.
Each circuit description gives not only the explanation of the working principle of the unit but also a list of signal denominations and origines and destinations. Furthermore a number of timing diagrams are available.

Locations of adjusting elements

Drawings in section 8 "CHECKING AND ADJUSTING" show the locations of the different adjusting elements to locate these elements rapidly.

I/O addresses

The address codes for the input ports and the output ports are written in the circuit diagrams in hexa-decimal notation. They can be found near to the I/O port circuitries.

9.7.4. Service faultfinding software routines

To facilitate fault finding the PM 3311 is provided with two internal service jumpers. These jumpers can select 3 service routines:

9.7.4.1. Interface test

9.7.4.2. Data-and address-bus test

9.7.4.3. Amplifier and time base setting test

The position of the jumpers, located at the component side of the switch board, is as follows:

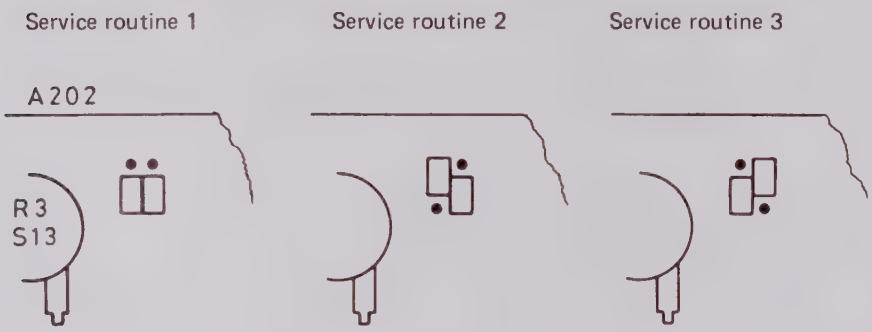

Rear view

Note 1: A service routine can be called only after switching off-and-on the instrument.

Note 2: Both jumpers in upper position means normal operation

Note 3: Always set the INTENS control fully counter clockwise

9.7.4.1. Interface test

This test is provided to check the interface functions of microprocessor unit A4. To make this test usefull, the user should know the principles of a microprocessor controlled system and the principles of the PM 3311 To start this test, the jumpers at the rear side of the switch board must be set as indicated in the figure at chapter 9-7-4, and afterwards switch-on the instrument again.
The following listing indicates the test sequence, which is executed approximately every 325 μs.

- All alpha-numeric displays are filled with "1"
- To trigger the measuring oscilloscope the SOD pulse at X418 of unit A4 gets active once per cycle
- The pattern AA_H ($1010\ 1010_2$) is written into the output ports: D2424, D2426, D2427 (unit A21); D1326 (unit A13); D414 (unit A4)
  and into the counters D1308 and D1309, D1311 and D1312 (unit A13)
  and into the DAC D1327
- The pattern $3F_H$ ($0011\ 1111_2$) is written into the first address of the ACCU-RAM D601 and D602 (unit A6)
- The TBS pulse is set to 25 kHz by setting $A1_H$ ($1010\ 0001_2$) into output port D1221
- The pattern $3F_H$ ($0011\ 1111_2$) is read out of the ACCU D601 and D602 (unit 6) and written into output port D201.
  This results in lighting of the following scale-and pilot lamps: UNCAL A and B; NOT TRIGD'D RUN and the six scale lamps of the A and B AMPL/DIV switches and the TIME/DIV switch.
- The position of the pushbutton switches DISPLAY are copied to the corresponding SELECT pilot lamps.
- The position of the push-pull-switches INVERT are copied to the corresponding DISPLAY pilot lamps.

NOTE: The ACCU DISPLAY pilot lamp can be tested by the AUTO or DC/AC triggering switches.
DC or AC: ACCU DISPLAY pilot lamp ON.
AUTO : ACCU DISPLAY pilot lamp OFF.

9.7.4.2. Address and data bus test

This test is provided to check the data-and address bus. To start this test the jumpers at the rear side of the switch board must be set as indicated in the figure at chapter 9.7.4., and afterwards switch-on the instument again.
The following listing indicates the test sequence, which is repeated every 3.8 ms.

- All alpha numeric displays shows "2"
- The patterns
  01_H ($0000\ 0001_2$)
  02_H ($0000\ 0010_2$)
  04_H ($0000\ 0100_2$)
  08_H ($0000\ 1000_2$)
  10_H ($0001\ 0000_2$)
  20_H ($0010\ 0000_2$)
  40_H ($0100\ 0000_2$)
  80_H ($10000\ 000_2$)
  are written sequential into the data-ram D601 and D602.
- The above patterns are read out of the data-ram. If the data bus is incorrect the NOT TRIG'D pilot lamp will light. If the data bus is correct the next step is carried out.
- The data Ø Ø H upto and included FFH are written in the data ram on the addresses C Ø Ø Ø H upto and included C Ø FFH.
- The above data are read out of the data ram.
  If the address bus is incorrect the REMOTE pilot lamp will light. If the address bus is correct the test will start again.

9.7.4.3. Front panel switch setting test

This test is provided to copy the settings of the front panel switches (except for the trigger mode and trigger source switches) to the output ports contineously.
Now easy checking of switches, interconnections and output ports is possible.
To start this test, the jumpers at the rear side of the switch board must be set as indicated in the figure of chapter 9.7.4. and afterwards switch-on the instrument again.
The following listing indicates the test sequence:

- All alpha numeric displays are filled with "3"
- The front panel settings are compared and copied into the output ports:

  D2424
  D2426
  D2427
  D1221

- The test repetition time is about 1 ms

9.7.5. Trouble-shooting hints

If a fault appears, the following test sequence can be used to find the defective circuit part:

- Check if the settings of the controls of the oscilloscope are correct. Consult the operating instructions in this manual.
- Check the equipment to which the oscilloscope is connected and the interconnection cables.
- Check if the oscilloscope is well-calibrated. If not refer to section 8 (checking and adjusting).
- Visually check the part of the oscilloscope in which the fault is suspected. In this way, it is possible to find faults such as bad soldering connections, bad interconnection plugs and wires, damaged components or transistors and IC's that are not correctly plugged into their sockets.
- Location of the circuit part in which the fault is suspected: the symptom often indicates this part of the circuit. If the power supply is defective the symptom will appear in several circuit parts.

After having carried out the previous steps, individual components in the suspected circuit parts must be examined:

- Transistors and diodes. Check the voltage between base and emitter (0,7 Volt approx. in conductive state) and the voltage between collector and emitter (0.2 Volt approx. in saturation) with a voltmeter or oscilloscope. When removed from the p.c.b. it is possible to test the transistor with an ohmmeter since the base/emitter and base/collector junctions can be regarded as diodes. Like a normal diode, the resistance is very high in one direction and low in the other direction. When measuring take care that the current from the ohmmeter does not damage the component under test.
  Replace the suspected component by a new one if you are sure that the circuit is not in such a condition that the new one will be damaged.
- Integrated circuits. In circuit testing can be done with an oscilloscope or voltmeter. A good knowledge of the circuit part under test is essential. Therefore first read the circuit description in section 6.
- Capacitors. Leakage can be traced with an ohmmeter adjusted to the highest resistance range. When testing take care of polarity and maximum allowed voltage. An open capacitor can be checked if the response for AC signals is observed. Also a capacitance meter can be used: compare the measured value with value and tolerance indicated in the parts list.
- Resistors. Can be checked with an ohmmeter after having unsoldered one side of the resistor from the p.c.b. Compare the measured value with value and tolerance indicated in the parts list.
- Coils and transformers. An ohmmeter can be used for tracing an open circuit. Shorted or partially shorted windings can be found by checking the wave-form response when HF signals are passed through the circuit. Also an inductance meter can be used.
- Data latches. To measure on inputs and outputs of data latches a measuring oscilloscope can be triggered by the clock signal which is connected to the clock input of the data latch.
  Check the input data lines one by one during the active edge of the clock signal.
  This measurement can only be done in this way when there is an acceptable repetition time of the clock signal. A too low clockpulse repetition time results in a low intensity of the trace on the C.R.T. screen of the measuring oscilloscope.
  The outputs can easily be checked for correct data by an oscilloscope or voltmeter

Oscilloscope checking of micro-processor bus signals

The 8085 micro-processor (D408) is provided with the following busses:
- Address bus
- Data bus
- Control bus

In general, if signals on these bus lines are checked with an oscilloscope, a very unstable display will be the result.
This is due to the fact that these signals vary with time in a rather unpredictable way.
If anyhow a stable display of signals from one of these busses is obtained, this may be an indication that the micro-processor runs in a small program loop.

Note: *Note:*

If a component must be replaced always use a direct-replacement. If not available use an equivalent after carefully checking that it does not degrade the instrument's performance. See also section 9.1. (replacement).
After replacement of a component the calibration of the instrument may be affected due to component tolerances. If necessary do the required adjustments.

Most of the test measurements can be carried out with a 2-channel oscilloscope and a voltmeter.
Use of a 4-channel oscilloscope with delayed time-base (e.g. PM 3244 or PM 3264) is recommended.
A number of measurements can also be done with a correct triggered logic analyzer.
Probes must be earthed near to the measuring points.

9.7.6. Overall view of provisions and service methods especially for fault location in various digital circuitries of the instrument.

FRONT BOARD A201

The data to be displayed in the alphanumeric displays and the pilot lamps can be measured in the following way:

Pilot lamps

Trigger an oscilloscope with the clock signal on point 11 of the relevant latch D201 or D202 and check the data lines D0 ... D7 one by one during the positive going edge of the clock signal.
The data outputs can easily be checked for correct data by an oscilloscope or voltmeter.

Alphanumeric displays

Trigger the main time-base of an oscilloscope externally with the "DELAY LOOP TRIGGER" which is available on test point X412 of unit A4.
Connect the signal $\overline{IOA}$ on point C21 of connector X424 on unit A4, with channel A of the oscilloscope and set the TIME/DIV switch to 0.2 ms/div.
A group of 16 negative going $\overline{IOA}$ pulses is displayed now.
Select this group of 16 pulses with the aid of the delayed time-base in such a way that a triggered display of 16 pulses divided over the whole ten divisions of the screen is obtained.
The first $\overline{IOA}$ pulse belongs to address 80A0H and the last $\overline{IOA}$ pulse belongs to address 80AFH.
By connecting the data lines D0 ... D7 one by one to the B channel of the oscilloscope the data can be checked.

Set the oscilloscope for this check in ALT-mode and use the TBMAGN and XPOSITION controls.

SWITCH BOARD A202

For measuring on the switch board the instrument has to be set in the SERVICE ROUTINE NUMBER 3 (page 9-16) with the jumpers on unit A202.

Switches

The output signals of the front panel switches can be measured with a normal voltmeter on the CIS connectors or the input of the multiplexer's D241-D242-D243-D247-D248 and D249.
Signals can be checked while operating the relevant switches.

Multiplexers

Trigger the MAIN TIME-BASE of a dual channel oscilloscope with one of the signals $\overline{RDF0}$ - $\overline{RDF2}$ or $\overline{RDF4}$ connected to the channel A input.
RDF0 is available on testpoint X246 on unit A202
RDF2 is available on testpoint X244 on unit A202
RDF4 is available on testpoint X243 on unit A202
Set the measuring oscilloscope in 5 μs/div. - DC - TRIG - SLOPE "–" and correct LEVEL.

Connect the data lines D0 ... D7 one by one to the channel B input and check the data during the positive going edges of the trigger signal on channel A when operating the relevant front panel switches.

MICROPROCESSOR UNIT A4

Every $\approx$ 20 ms a number of trigger pulses are generated by the software for test purposes.
- Trigger pulse "START MAINLOOP" is available at X407.
- Trigger pulse "START DISPLAY LOOP" is available at X409.
- Trigger pulse "START DELAY LOOP" is available at X412.

Latches and bidirectional buffer D413 - D414 - D416 and D417 are placed in sockets and can be easily removed from the unit for test purposes.
- Removing D413 results in disconnecting the internal address bus from the internal address/data bus.
- Removing D414 results in disconnecting the output port from the system.

– Removing D416 results in disconnecting the system address bus from the internal address/data bus.
– Removing D417 results in disconnecting the system data bus from the internal address/data bus.
This can for example be used to separate and locate the fault in case of a short-circuit in one of the busses.

The unit contains a number of soldering spots with the following functions:
– Signal RST 7.5 can be connected to the +5 V for test purposes.
  This is not of interest for servicing in standard instruments.
– PROM address line A11* can be disconnected from the +5 V and connected to address line A11 from the microprocessor.
  This is necessary in case the IEC option PM 3325 is used because of the use of a PROM circuit D407 of 4096 x 8 bits.
– For test purposes the $\overline{\text{RESIN}}$ input circuit (watchdog circuit) can be replaced by a simple reset circuit with C411.
– The TRAP input circuitry can be made inactive for service purposes.

To measure the signals ZEN - INV and CLDT, the measuring oscilloscope must be triggered with the signal on X407 (START MAINLOOP).

– ZEN can be checked by operating the front panel display select switches.
– INV can be checked by operating the front panel invert switches for STO1-2 and 3.

The input data lines for the latch D414 can be measured with the method described in section 9.7.5.

Fault finding method

– Check supply voltages.
– Check whether the "START MAIN LOOP" trigger is present once every 20 msec at testpoint X407 on unit A4 or not.
– Check if the μP is switched in the HOLD-state. $\overline{\text{RD}}$ and $\overline{\text{WR}}$ are then switched to about 1.5 V (can be done via input TRAP for example).

– Disconnect TRAP input (solder spot).
– Disconnect the WATCHDOG circuit and connect C411 to $\overline{\text{RESIN}}$ (solder spot).
– Replace eventually the μP itself.
– Replace eventually the PROM circuits.
– Check the busses for short circuits or interrupts. For this, latches and bidirectional buffers can be removed from their sockets.

After the repair everything must be brought in the normal position again.

RAM UNIT A6

Tri-state buffer D617 can be removed from its socket so that no data can be placed on the system data bus by the RAM unit.

BUFFER UNIT A7

A solder spot is available in the CLKSH circuitry for test purposes. So a CLKSH can be derived from signal C4 which is generated during the time that the ADC output is placed on the ADC bus. The ADC output contents can then directly be placed in the shift register without correction.

Using this facility in combination with the interruption of signal line DAC M-1, results in the switching off of the total correction circuitry.

After the repair everything must be brought in the normal position again.

TIME-BASE UNIT A12

For test purposes in ROLL-mode, the ROLL-mode action can be done 5000 times faster by placing jumper S1201 in the left position.

Check for correct time-base setting

Select service test routine number 3.
The TIME/DIV switch position is now read by the microprocessor and this processor in turn will set the belonging code (according to the table on page 6-136) on the data lines D0 ... D7 so that it can be latched by latch D1221 on unit A12.

These codes can be measured on the inputs of latch D1221 by triggering a monitor oscilloscope with the clock signal on D1221-pt. 11. Now the data lines can be observed one by one during the active edge of the clock signal. Codes on the outputs of the latch can be measured with a voltmeter or an oscilloscope.

In this way the correct functioning of the TIME/DIV switch, the microprocessor and the latch D1221 can be checked for RECURR-mode as well as for ROLL-mode. (In ROLL-mode D5 will steady be "0") and different TIME/DIV switch positions.
Now all the dividers and multiplexers can be checked for all the TIME/DIV switch positions in a simple way.

ROLL-mode check 0.5 s/div ... 60 min/div

- Depress pushbutton ROLL.
- Set jumper S1201 in the left position.
- Measure the TBS signal on D1219 - point 7 with an oscilloscope and check the signal repetition time in accordance with the table below.

TIME/DIV switch setting	Signal repetition time
60 min/div	28,80 ms
30 min/div	14,40 ms
15 min/div	7.20 ms
6 min/div	2.88 ms
2 min/div	0.96 ms
1 min/div	0.48 ms
0.5 min/div	0.24 ms
20 s/div	160 µs
10 s/div	80 µs
5 s/div	40 µs
2 s/div	16 µs
1 s/div	8 µs
0.5 s/div	4 µs

- Set the jumper S1201 again in the right position.

RECURR-mode check 0.2 s/div ... 0.5 ms/div

- Depress pushbutton RECURR.
- Measure the TBS signal on D1219 - point 7 with an oscilloscope and check the signal repetition time in accordance with the table below.

TIME/DIV switch setting	Signal repetition time
0.2 s/div	8 ms
0.1 s/div	4 ms
50 ms/div	2 ms
20 ms/div	800 µs
10 ms/div	400 µs
5 ms/div	200 µs
2 ms/div	80 µs
1 ms/div	40 µs
0.5 ms/div	20 µs

RECURR-mode check 0,2 ms/div ... 0,2μs/div

- Depress pushbutton RECURR.
- Measure the TBF signal on X1206 in accordance with the table below.

TIME/DIV switch position	Signal repetition time
0.2 ms/div	8 μs
0.1 ms/div	4 μs
50 μs/div	2 μs
20 μs/div	0.8 μs
10 μs/div	0.4 μs
5 μs/div	0.2 μs
2 μs/div	0.08 μs
1 μs/div	0.04 μs
0.5 μs/div	0.02 μs
0.2 μs/div	80ns

DELAY TRIGGER UNIT A13

There are two solder spots available on the unit. One to invert the PENLIFT output signal and a solder spot to connect the input trigger TRIST directly with the output signal line DELTRG.
In this way the whole delayed trigger circuit is switched off, and the trigger point is at the right-hand side of the CRT screen.

Check for correct latch, delay counter and DAC delay setting

The input data lines for the latch D1326, the counters D1308 - D1309 - D1311 and D1312 and the DAC DELAY D1327 can be measured with the method described in section 9.7.5.

Trigger signals

D1324 - pt. 8	for data latch D1326
D1324 - pt. 6	for MSB of delay counter
D1324 - pt. 12	for LSB of delay counter and for DAC DELAY

The delay counter (used in D- and P-mode) is set according to the formula:

$$\text{Counter setting} = \{(10+N) * 5+8\}$$

In this formula N is the number of divisions set by the user ($-9 \leqslant N \leqslant 9999$).
Note that the four least significant bits the inverted information is placed on the data bus.

The DAC DELAY (used in S-mode) is set in the following way:

$$\text{DAC DELAY setting} = 2 * N$$

N is the number of divisions set by the user ($0 \leqslant N \leqslant 100$)

DC POWER SUPPLY A15

Dummy load for PM 3310 power supply

Voltage	Load resistance	
– 12 V	15.6 Ω	(3 x 47 Ω //)
+ 12 V	15.6 Ω	(3 x 47 Ω //)
– 6 V	40 Ω	(47 Ω // 220 Ω)
+ 6 V	40 Ω	(47 Ω // 220 Ω)
– 5.2 V	5 Ω	(2 x 10 Ω //)
+ 5 V	2.5 Ω	(4 x 10 Ω //)
+ 40 V	300 Ω	
–125 V	10 kΩ	
+125 V	10 kΩ	

INPUT AMPLIFIER UNIT A21

Check for correct latch setting

The input data lines for the latches D2424 - D2426 and D2427 can be measured with the method described in section 9.7.5.

Multiplexer check

Trigger the MAIN-TIME-BASE of a dual channel oscilloscope with the external trigger signal "MAIN LOOP TRIGGER" which is available on testpoint X407 on unit A4.
Connect the signal on point 6 of D2423 on unit 21 with the channel A of the oscilloscope and set the TIME/DIV switch to 20 µs/div.
Two negative going pulses are displayed now.
Select these two pulses with the aid of the delayed time-base in such a way that a triggered display of these two pulses is obtained.
During the first pulse multiplexers D2418 and D2419 are set to the "T" position and during the second pulse they are set to the "1" position.
By connecting the data lines D0 ... D7 one by one to the B channel of the oscilloscope the data can be checked.

Checking the protective leads

The correct connection and condition is checked by visual control and by measuring the resistance between the protective-lead connection at the plug and the cabinet.
The resistance should be $< 0{,}5\ \Omega$. During measurement the mains cable should be moved. Resistance variations indicate a defect.

Checking the insulating resistance.

Measure the insulating resistance at $U_{dc} = 500$ V between the mains connections and the protective lead connections.
For this purpose set the mains switch to ON. The insulating resistance should be $> 2\ M\Omega$.

9.7.7. Mains voltage setting

If the instrument is to be used at a mains voltage between 110V and 120V ± 10% (115V visible in the mains adaptor switch window) or between 220V and 240V ± 10% (230V visible in the window), the appropriate voltage should be selected by switching the mains adaptor switch at the rear of the instrument.
If the mains plug has to be adapted, the mains cord must be connected as stated below:

green or green/yellow : protective earth
black or brown : phase
white or blue : neutral

10. INTRODUCTION TO MICROPROCESSORS

10.1. A BRIEF ENCOUNTER

Microcomputers, like people, do not reveal all their secrets at a brief encounter. If this is your first introduction to a microcomputer, you will need a little time to familiarise yourself with its characteristics — what it can do, how it does it and how its facilities are best used to advantage.

As its name implies, a microcomputer is an extremely small device.
Extremely small because it is based on a silicon-chip microprocessor.

The great future predicted for the microprocessor lies in its *enormous work capacity* for processing signals, available within *negligible physical capacity.*

The human brain has the ability to determine by calculation in a more sophisticated way, but our microcomputer, with its built-in 'one-track' mind, is capable of much faster calculation speeds. Also the computer facilities extend beyond the confines of the brain and memory to perform some of the functions we allocate to other parts — the eyes, ears, arms and legs.

Besides the ability to store and manipulate information, the microprocessor circuits are capable of recognising visual, aural and physical conditions, evaluating them and presenting them in a form required by an instrument or operator. A practical application of this could be the monitoring of strain-gauges or thermometers in an industrial process at regular intervals and the recording of the values, together with any alarm conditions, on a print-out. In contrast to this data logging function, the microcomputer could be an integral part of a laboratory measuring instrument; e.g. a digital oscilloscope, for control, storage and read-out purposes.
Microcomputers are designed with built-in flexibility to enable them to be used for a wide variety of applications. This versatility is obtained in the signal conditioning circuits that present the data to the computer central processing unit in a form that it can readily understand. In electronics, the simplest and most reliably defined condition is when a circuit is either switched on or switched off. This two-state notation of defining the numerical terms of a problem is universally used in computers and is known as the binary system.

10.2. COMING TO TERMS

After a general picture of the microcomputer field, it is useful to look a little closer at the practical aspects and to discuss some of the terms that are in everyday use.

Microcomputer	A miniature electronic system that performs arithmetic and logic operations on data according to a programmed sequence of instructions stored in a memory. As a calculating system, the microcomputer consists not only of the physical components (the hardware) but also of program instructions (the software).
Hardware	The mechanical, electronic and electromechanical components of the computer system.
Software	The programmer's language for communicating with the computer. This includes sets of programs translated into binary form to enable the computer to perform specific functions as required by the system user.

Microprocessor CPU

The heart of the microcomputer, the central processing unit (CPU) that performs all the functions as arithmetic and logic operations that are written in the system software program. In addition to the Arithmetic and Logic Unit (ALU) it also contains a Control Block and Register Array.

Memory

A high-speed electronic device in which data and instructions are stored for subsequent processing.

Input/Output

Devices that provide communication between the microcomputer system and the outside world. For example, interfacing input data and instructions via a keyboard and outputting results via a display unit or printer.

Instruction set

A set of characters that define an operation with generally one or more addresses, which are given via the input device and can be stored in the memory. When a program is running, data-words are processed in a sequence and manner as specified by the instructions, the results being stored and/or outputted via an output device.

Data word

A word, or group of binary digits (bits) used to encode data, as distinct from an instruction word. A byte is a word of 8 bits.

Binary notation

A system of numbering used in computers that uses 2 as a base in contrast with the normally used decimal system that has 10 as a base. Only two symbols are required in the binary system, 0 and 1, which can be conveniently represented in electronic circuits as two voltage levels in a signal. The binary equivalents of the decimal numbers 0 to 10 are as follows:

DECIMAL		BINARY
0	=	0000
1	=	0001
2	=	0010
3	=	0011
4	=	0100
5	=	0101
6	=	0110
7	=	0111
8	=	1000
9	=	1001
10	=	1010

Addition:

DECIMAL	BINARY
5	0101
+9	+1001
14	1110

To add binary numbers, proceed as in decimal but remember that the radix is 2. i.e. carry 1 when 2 is reached.

Hexadecimal notation

Using 16 as a base this system provides a short-band method of writing 4-bit binary numbers with alphanumeric symbols. This is useful for a data-word grouped as a 4-bit field, where there are 16 combinations.

COMBINATION	BINARY CODE	HEXADECIMAL CODE
0	0000	0
1	0001	1
2	0010	2
3	0011	3
4	0100	4
5	0101	5
6	0110	6
7	0111	7
8	1000	8
9	1001	9
10	1010	A
11	1011	B
12	1100	C
13	1101	D
14	1110	E
15	1111	F

Analog-to-Digital Converter

Enables physical or electrical input signals that are in analog form to be converted to digital form for processing in the computer.

Register

Consists of a group of two-state flip-flops, which by means of a clock-pulse command can store the data-word present on its input lines.
The output lines remain stable until a new data-word is clocked into the register. A group of registers forms a memory.

Data-bus

Enables several circuits to communicate with each other without the need for separate data paths. This databus is common to all circuits and a timing and control circuit organises which circuits use the databus at any particular time, in conjunction with an ADDRESS-BUS and a CONTROL-BUS.

Address-bus

Enables memory locations to be addressed by their unique device numbers.

Control-bus

Controls the exact timing of the communication on the data-bus and also the direction of data flow.

10.3. SYSTEM FEATURES

With a basic understanding of the language and hardware component parts of a microcomputer it is interesting to discover how these can be integrated to form an organised system. The following illustrations show the basic system features which, for greater comprehension, should be studied with reference to the computer terms that have been previously defined.

Basic features

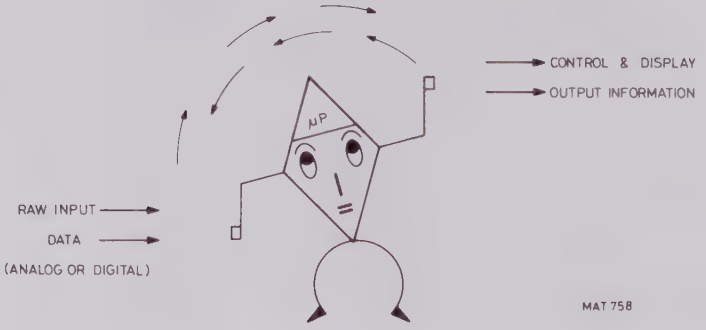

Fig. 10.3.1.

In simple terms, our Master Microcomputer takes data with one hand, juggles with it, and hands it out with the other. Being highly intelligent, its right hand definitely knows what its left hand is doing!

Input features

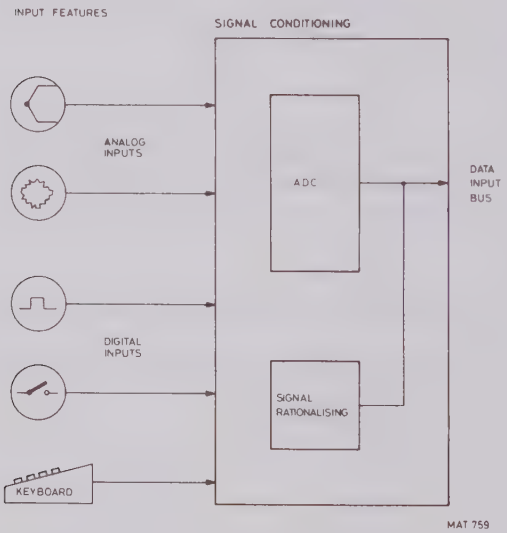

Fig. 10.3.2.

The raw inputs from analog sources such as thermocouples, strain-gauges voltage and current devices, etc., must first be converted to the digital form required by an ADC in the signal conditioning part of the microcomputer.
Digital inputs from switch contacts, logic levels from sold-state devices or from counters, etc., must be converted to the correct logic levels within the signal conditioning part.

Output features

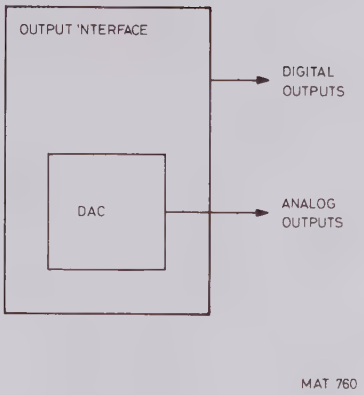

Fig. 10.3.3.

The output interface circuits are designed to present the output data in a form suitable for the various system requirements, e.g. digital displays, print-outs, parallel and serial interfaces, alarms, etc. When analog output signals are required, digital-to-analog conversion (DAC) is performed in the computer output interface circuits.

Memory features

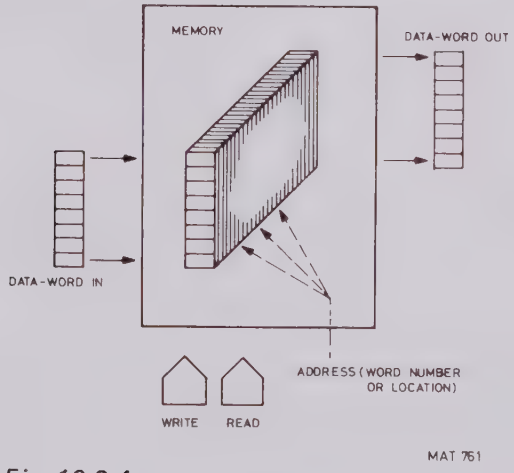

Fig. 10.3.4.

A memory is simply a group of registers used for storing data-words, for future retrieval when required. With a WRITE pulse, a data-word can be stored; a READ pulse enables a data-word to be read out of a location.
An ADDRESS must be provided with the READ and WRITE pulses to locate the specified data-word.
Memories can be used for storing signal data or for programming instructions. Instruction sets for microcomputers are usually stored in read-only memories, ROMs or PROMs (Program Read Only Memories).

The memory contains not only the information to tell the microprocessor what to do, but also the instructions on how to do it.
Variable data are usually stored in random-access memories, RAMs.

Microprocessor features

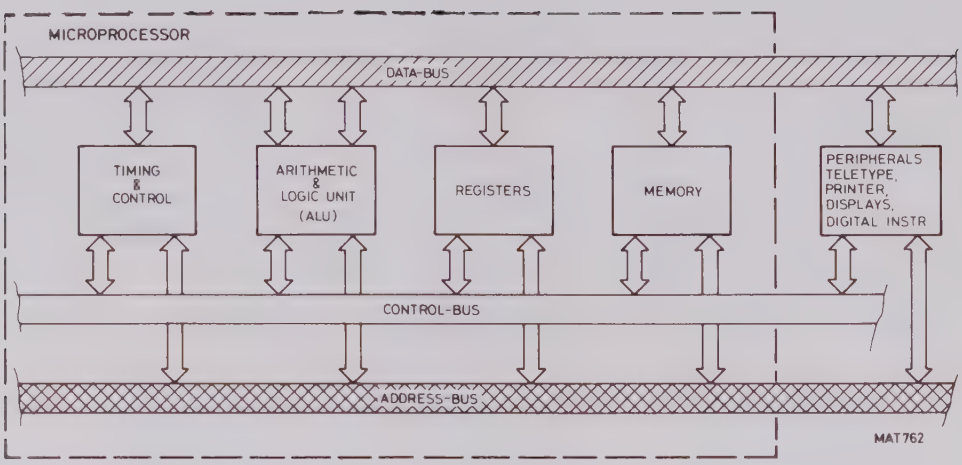

Fig. 10.3.5.

The elementary circuits of a microcomputer comprise:
- registers
- a memory (ROM + RAM)
- a data-bus, control-bus and address-bus
- a data-bus, timer and controller circuit
- an arithmetic and logic unit (ALU)

If the integrated circuit contains no memory, or only a limited memory, we refer to this as a microprocessor. The microcomputer, together with its memory and the peripheral equipment constitute the hardware of the system.

Programming features

In order to perform meaningful operations with the hardware of a computer system, we need to specify precisely:
- what OPERATIONS are required upon a defined DATA-WORD
- in what SEQUENCE these will occur
- to which LOCATION the results of the operation have to be deposited.

This process of prescribing the necessary actions within a computer system is called PROGRAMMING the computer software.
Programming consists of the sequential execution of the instructions stored in the memory, under the control of the TIMING and CONTROL part. Its circuits decode the instruction and initiate the necessary data-word transports and operations.
A basic flow-chart cycle for each instruction is as follows:

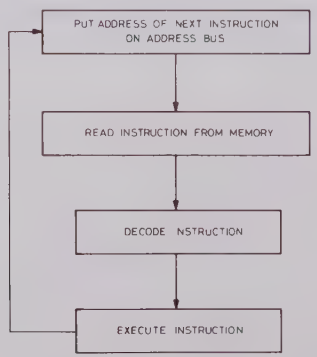

Fig. 10.3.6.

A PROGRAM COUNTER is a special register equipped to increment the address of sequential instructions to enable new instructions to be FETCHED from the memory. As the program counter is connected to the data-bus, the contents can be replaced by other values to permit a JUMP to an instruction elsewhere in the memory.

As the execution of an instruction consists of a number of sub-steps, it is useful to be able to store an instruction temporarily in a register if the next operation needs to use this result. The two operations are combined in a single register, called the ACCUMULATOR for ease of presentation to the ALU in the next instruction.
Apart from the memory, microcomputers usually have some general-purpose registers to store intermediate results on a temporary basis.

Note: For more information refer to:
"INTRODUCTION TO MICROPROCESSORS AND THEIR USE IN T&M INSTRUMENTS".
Ordering number: 9499 990 00711.

11. EXPLANATION OF USED SYMBOLS

I NTRODUCTION

Common control block
The use of binary logic integrated circuits (M.S.I.'s) necessitated an abbreviated notation for the interdependency of various functions, as well as simplified symbols for complex functions.
The most important information is: which signals appear at the input and how the outputs behave with respect to the function of the IC.

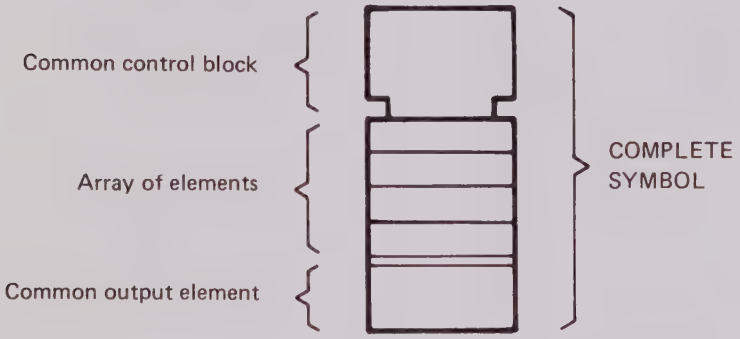

Common control block
On the common control block, all **common** input lines are connected. These lines must have funtional relation to the other elements of the symbol. Examples: general reset, output enable, inhibit input, clock signal etc.

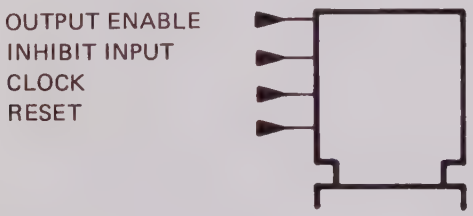

Array of elements
Each element of the array has its own in-and outputs. Example: it can be a D-flip-flop with one data input and two outputs (one inverted and the other not inverted).

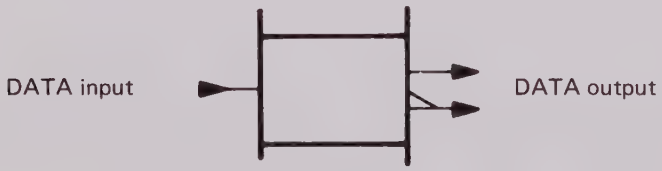

LIST OF CHARACTERS AND SYMBOLS

In the common control blocks, characters and symbols are used to indicate the function of the in-and outputs.

SYMBOL	DESCRIPTION
	Polarity indicator at input
	Polarity indicator at output
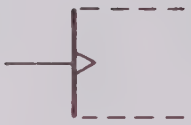	Dynamic input
	Dynamic input with polarity indicator
	Schmitt - trigger input
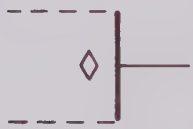	Open collector output
	Tri-state output
	D - input
	Enable input

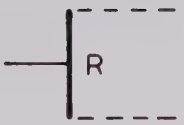

Forcing reset input

Forcing set input

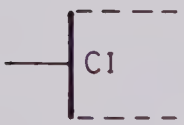

Carry input of an arithmetical element

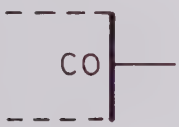

Carry output of an arithmetical element

Line carrying no logic information (input)

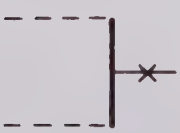

Line carrying no logic information (output)

Clock input

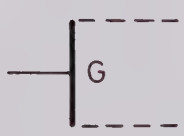

G – input implying an AND– relationship

Count up command for counters

Count down command for counters

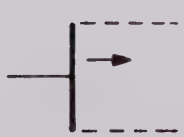

Shift right (down) command for shift register

Shift left (up) command for shift register

Common output element
On the common output element the common or resulting outputs of the elements are drawn.
Example: it can be a carry or a borrow signal for a counter.

Input and output lines
Input lines are drawn at the left side of a symbol, output lines at the right side. In-and output lines can be drawn with and without ◺ as shown.

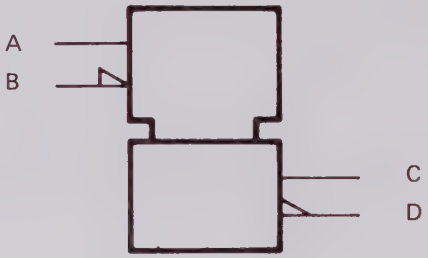

Meaning of the above-drawn lines A, B, C and D:
- Line A is active for the block when it is high ("1") and inactive when it is low ("0") .
- Line B is active for the block when it is low ("0") and inactive when it is high ("1").
- Line C is low ("0") in the rest state of the element or when output is inhibited. This output is then inactive.
- Line D is high ("1") in the rest state of the element or when output is inhibited. This output is then inactive.
- When line C is "high", this output is active.
- When line D is "low", this output is active.

BASIC SYMBOLS

Inverter

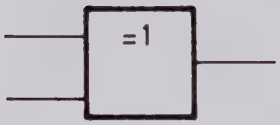

Exclusive – OR

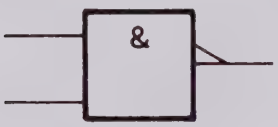

NAND (inverting AND)

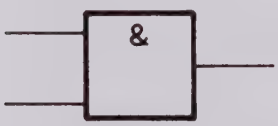

AND

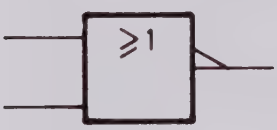

NOR (inverting OR)

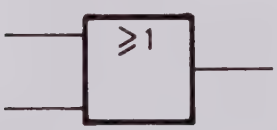

OR

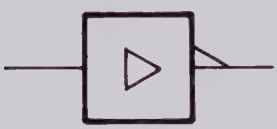

Inverting emitter – follower

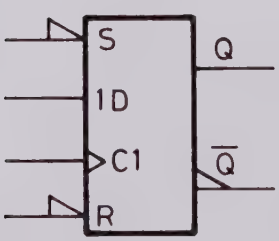

D – type flip flop

DEPENDENCY NOTATION

1. Introduction

Dependency notation is a means of denoting the relationship between inputs, outputs and between inputs and outputs, without actually showing all the element and interconnections involved.

Apart from its use in complex element, dependency notation should not be used to replace the symbols for combinative elements.

The information provided by dependency notation **supplements** that provided by the qualifying symbol for an element's function.

In the convention for the dependency notation, use is made of the terms "affecting" and "affected". In the case where it is not evident which inputs must be considered as being the affecting or the effected ones (e.g. if they stand in an AND-relation), the choice may be made in any convenient way.

Ten different kinds of dependency have been defined. .
They are:

A	ADDRESS	— dependency
C	CONTROL	— dependency
EN	ENABLE	— dependency
G	AND	— dependency
M	MODE	— dependency
N	NEGATE	— dependency
R	RESET	— dependency
S	SET	— dependency
V	OR	— dependency
Z	INTERCONNECTION	— dependency

Each dependency is represented by a capital letter or letter combination, as shown above.

AND—, OR— and NEGATE—dependencies are used to denote Boolean relationships between inputs and/or outputs. INTERCONNECTION-dependency is used to indicate that an input or output is connected to one or more inputs and/or outputs.

CONTROL—dependency is used to identify a timing-input or a clock-input of a sequential element and to indicate which inputs are controlled by it.
SET— and RESET—dependencies are used to specify the internal logic states of an RS bistable element in the case that the R— and S—inputs both stand at their internal 1—states.
ENABLE—dependency is used to identify an ENABLE—input and to indicate which inputs and/or outputs are controlled by it (e.g. which outputs take on their high impedance state).
MODE—dependency is used to identify an input which selects the mode of operation of an element and to indicate the inputs and or outputs depending on that mode.
ADDRESS—dependency is used to identify the ADDRESS inputs of a memory.

The table below lists the various dependencies and summarizes their effects. In this table the word "action" implies:

— that affected inputs will have their normally defined effect on the function of the element;

— that affected outputs will take on the internal logic states as determined by the function of the element.

2. Convention

a. Dependency notation usually defines relationships between internal logic states. However in the case of 3–state outputs and open circuit outputs, ENABLE–dependency defines relationship between the internal logic states of affecting inputs and the external states of affected outputs.

b. Application of dependency notation is accomplished by:
- labelling the affecting input or output with the relevant letter followed by an identifying number;
- labelling each input or output affected by that affecting input or output with that same number;
- labelling each input or output affected by the **negated** internal logic state of the affecting input or output with that same number with a bar over it.

c. If the affected input or output already has a label, denoting its function, this label must be prefixed by the identifying number of the affecting input.

d. If an input is affected by more than one affecting input or output, the identifying number of each of the affecting inputs or outputs shall appear in the label of the affected one, separated by commas. The normal reading order of these identifying numbers is the same as the sequence of the affecting ralationship.

e. Two affecting inputs labelled with different letters, must not have the same identifying number, unless when one of the letters is A.

f. If two affecting inputs or outputs have the same letter and the same identifying number, they stand in an OR–relation to each other.

g. If an affected input or output already has a label which would form an ambiguous combination with the identifying number, the latter must then be replaced by a different character (e.g. Greek letter) to avoid ambiguity.

h. An affecting input or output affects only the corresponding affected input or outputs of the element.

Type of dependency	Letter(s)	Effect on affected input or output if the affecting input stands at its internal 1–state	0–state
ADDRESS	A	permits action (address selected)	prevents action (address not selected)
CONTROL	C	permits action	prevents action
ENABLE	EN	permits action	– prevents action of affected inputs – imposes external high-impedance state on open-circuit and 3-state outputs (internal state of 3-state outputs unaffected) – imposes 0-state on other outputs
AND	G	permits action	imposes 0-state
MODE	M	permits action (mode selected)	prevents action (mode not selected)
NEGATE	N	complements state	no effect
RESET	R	affected output reacts as it would to S=0, R=1	no effect
SET	S	affected output reacts as it would to S=1, R=0	no effect
OR	V	imposes 1-state	permits action
INTERCONNECTION	Z	imposes 1-state	imposes 0-state

12. PARTS LISTS

(subject to alteration without notice)

The opening of parts, or removal of covers, is likely to expose live conductors. The instruments should therefore be disconnected from all voltage sources before any opening of parts or removal of covers is started.
During and after dismantling, bear in mind that capacitors in the instrument may still be charged even if the instrument has been separated from all voltage sources.
Item numbers (e.g. C R V) have been divided in groups which relate to the circuit, the unit and the circuit diagram, according to the following table.

Item numbers	Location	Unit number
100 . . . 199	Front side unit	A1
200 . . . 299	Front unit	A2
300 . . . 399	Mother board unit	A3
400 . . . 499	Microprocessor unit	A4
500 . . . 599	Trigger control unit	A5
600 . . . 699	Ram unit	A6
700 . . . 799	Buffer unit	A7
800 . . . 899	Conversion unit	A8
900 . . . 999	ACL unit	A9
3200 . . . 3399	CCD logic unit	A10
1100 . . . 1199	P^2CCD unit	A11
1200 . . . 1299	Time-base unit	A12
1300 . . . 1399	Delay trigger unit	A13
1400 . . . 1499	IEC unit (OPTIONAL)	A14
1500 . . . 1599	DC POWER UNIT	A15
1600 . . . 1699	AC POWER UNIT	A16
1700 . . . 1799	Rear side unit	A17
1800 . . . 1899	Delay line	A18
1900 . . . 1999	CRT socket	A19
2000 . . . 2399	Final ampl. unit	A20
2400 . . . 2699	Ampl. unit	A21
3000 . . . 3099	Ampl. unit	A21
2700 . . . 2999	Trigger unit	A22
3100 . . . 3199	EHT unit	A23
3400 . . . 3499	Driver unit	A34

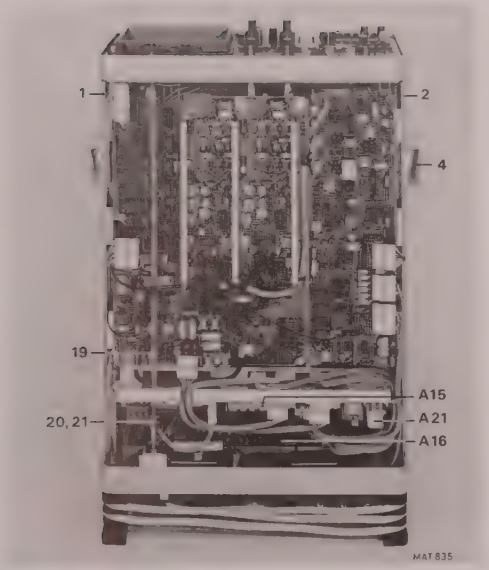

Fig. 12.1.1.

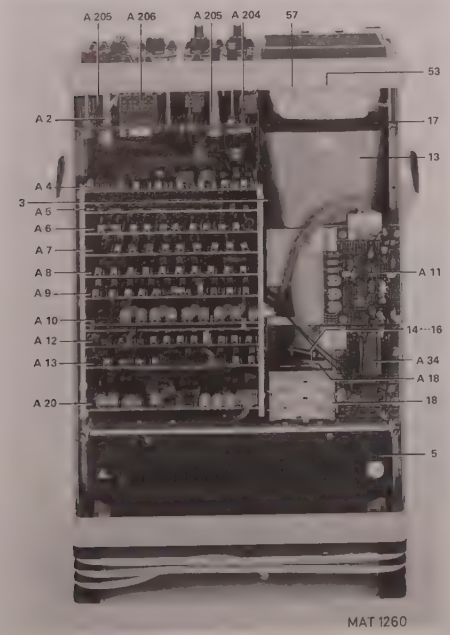

Fig. 12.1.2.

12.1. MECHANICAL PARTS

Item	Qty	Order number	Description	
1	1	5322 460 64042	Side profile left	
2	1	5322 447 94625	Side profile right	
3	2	5322 462 34199	Print support	
4	2	5322 528 34113	Arret for handle	
5	2	5322 447 94638	Cover top and bottom	
6	1	4822 502 11065	Cil bolt M4X6	
7	1	4822 505 10488	Square nut M4	
8	1	5322 532 14593	Washer 4. 3X12	
9	1	4822 530 80163	Spring washer 5,2	
10	1	5322 815 28054	Cil bolt M3X8	
11	1	4822 532 10332	Washer 3. 2X7	
12	1	4822 530 80173	Spring washer	
13	1	5322 462 54154	CRT shielding	
14	1	5322 492 64767	Clamping strip	
15	1	4822 502 10051	Cil bolt M4X20	
16	1	4822 505 10488	Square nut M4	
17	1	5322 466 64213	Plastic profile 30cm	
18	1	5322 256 64014	Battery holder	
19	1	5322 535 94978	Shaft assy	
20	1	5322 532 24398	Coupling	
21	2	4822 502 10668	Screw for coupling	
22	1	5322 455 81007	Textplate	
23	3	5322 414 30046	Knob dia 10	
24	3	5322 492 64337	Clamping spring knob	
25	9	5322 414 30044	Knob dia 10 shaft 6	
26	2	5322 414 60045	Attenuator knob assy	
27	1	5322 414 60046	Time/div knob assy	
28	3	5322 532 54478	Distance washer	
29	2	5322 462 44458	Housing	Range indication instrument parts.
30	2	5322 462 44459	Cover	
31	2	5322 492 54338	Compression spring	
32	2	5322 268 14157	Contact pin	
33	1	5322 462 40595	Cover for IEC conn.	
	1	5322 480 34074	Contrast filter BLUE	
37	1	5322 459 20269	Bezel	
38	1	5322 480 34046	Contrast filter GREY	
39	1	5322 462 40594	Front cover	
40	1	5322 447 90318	Top cover	
41	1	5322 466 64214	Adhesive strip	
42	1	5322 447 90317	Bottom cover	
43	1	5322 455 81008	Text strip	
44	1	5322 498 54042	Aluminium profile	
45	1	5322 466 91401	Plastic profile	
46	2	5322 535 74401	Locking pin	
47	2	5322 492 54155	Compression spring	
48	1	5322 498 54044	Bracket left	
49	1	5322 498 54043	Bracket right	
50	5	5322 414 70018	Knob cover blue + line	
51	7	5322 414 70016	Knob cover brown + line	
52	1	5322 414 70015	Knob cover brown	
53	2	5322 380 24089	Light reflector assy	
54	1	5322 290 64085	Soldering support	
55	1	5322 255 44088	Led holder	
56	1	5322 505 14184	Nut for cal terminal	

Item	Qty	Order number	Description	
57	2	5322 255 24015	Lamp holder	
58	4	5322 462 50215	Extension part	S29
59	4	5322 414 20034	Push button + green	
60	1	5322 505 14178	Knurled nut	
61	1	5322 466 85888	Locking plate	
62	1	5322 532 24579	Bush	
63	1	5322 532 14697	Washer	
64	1	5322 290 34022	Soldering tag	
65	1	5322 506 14001	Nut	
66	2	5322 505 14186	Nut	
67	2	5322 532 34124	Spacer	
68	2	5322 532 24374	Coupling R7-R8	
69	8	5322 414 20033	Push button brown	
70	2	5322 414 20035	Push button lightbrown	
71	35	5322 462 50215	Extension part switch	
72	6	5322 532 54492	Paper washer 2.2X5	
73	2	5322 278 74008	Arret for switch	
74	2	5322 535 94966	Inner shaft	
75	1	5322 278 74009	Arret for switch	
76	6	5322 255 34122	Lamp holder	
77	10	5322 532 60487	Ceramic spacer	
78	6	5322 255 44218	IC-FOOT 16 - P DIL	
	1	5322 255 44217	IC-FOOT 40 - P DIL	
	4	5322 255 44259	IC-FOOT 20 - P DIL	
	4	5322 255 44109	IC-FOOT 24 - P DIL	
	2	5322 255 44284	IC-FOOT 22 - P DIL	
79	2	4822 502 10692	CIL BOLT M3X30X19	
80	2	4822 532 10582	Washer 3.2X9	
81	2	4822 532 60711	Insulation bush	
82	2	5322 532 50488	Washer 4.3X9	
83	2	4822 532 10582	Washer 3.2X9	
84	2	4822 505 10325	Nut M3	
85	2	4822 532 10582	Washer	
86	2	4822 530 80173	Spring washer	
87	2	4822 505 10325	Nut M3	
88	1	5322 532 24578	Bushing	
89	1	4822 530 80173	Spring washer	
90	1	4822 502 11064	CIL bolt M3X6	
91	2	5322 255 40029	Transistor socket	
92	1	5322 256 40017	Fuse holder	
93	1	5322 325 50133	Cable grommet	
94	1	5322 405 94046	Bracket	
95	1	4822 502 10693	CIL bolt M4X8	
96	1	5322 321 14071	Mains cord assy	
97	4	5322 462 44457	Foot	
98	4	5322 529 14067	Rubber puffer	
99	4	4822 502 21078	CIL bolt M4X55	
100	4	5322 532 14593	Washer 4.3X12	

Item	Qty	Order number	Description
101	4	4822 530 80163	Spring washer 4.1
102	4	5322 532 24591	Distance bushing 6X5
103	8	5322 532 24592	Distance bushing 6X20
104	1	5322 447 90321	Inner rear plate
105	6	5322 532 24577	Threaded spacer
106	4	5322 381 14286	Window red
107	2	5322 532 64277	Holder
108	4	5322 532 64278	Ring
109	2	5322 532 14696	Contact ring
110	2	5322 492 64765	Contact spring
			RANGE INDICATION PROBE PARTS FIG. 1.11.
111	1	5322 447 94652	Cast. al. front panel
112	1	5322 447 94653	Cast. al. rear panel
113	4	5322 466 90998	Spacer for alphanumeric display
114	25	5322 414 20034	Push button brown + green
–	6	5322 255 44207	Isolation bus for clockdriver D1001 on unit A34.

FLEXIBLE COUPLINGS

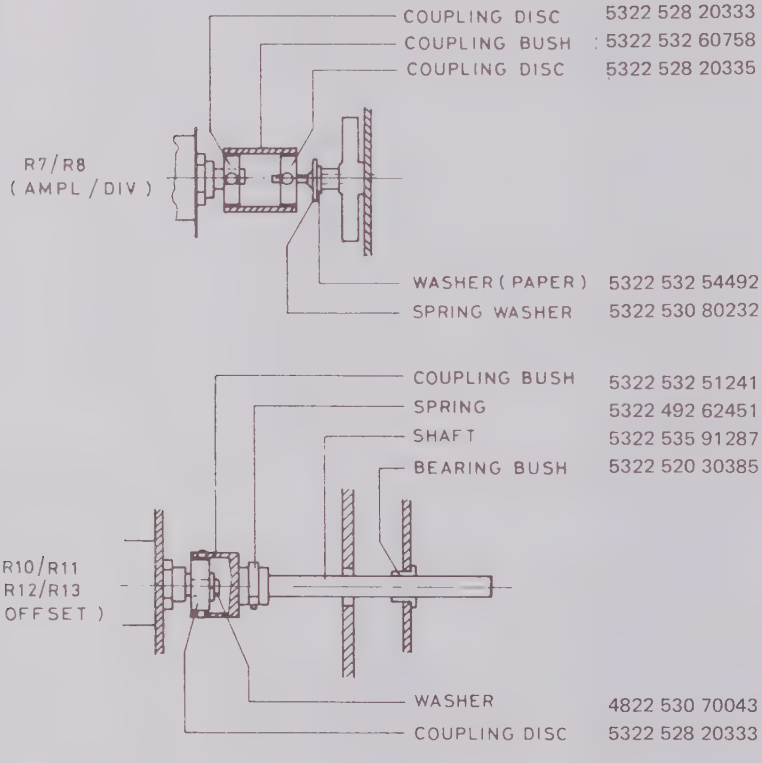

12.2. ELECTRICAL PARTS

Unit	Order number	Description
A101	5322 263 21002	Connector assy
A2	5322 216 51044	Front unit
A201	5322 216 54265	Front board
A203	5322 216 54266	Interconn. board
A204	5322 216 54267	Display switch board
A205	5322 216 54628	Save or delay switch board
A206	5322 216 54269	Clear switch board
A207	5322 216 54296	Scale switch board
A4	5322 216 51045	Micro proc. unit
A5	5322 216 51088	Trigger control unit
A6	5322 216 54273	Ram unit
A7	5322 216 54274	Buffer unit
A8	5322 216 54275	Conversion unit
A9	5322 216 54276	ACL unit
A10	5322 216 51043	CCD logic
A11	5322 216 51031	P^2CCD unit
A12	5322 216 51041	Time base unit
A13	5322 216 54281	Delay trigger unit
A15	5322 216 54282	DC-power unit
A16	5322 216 54283	AC-power unit
A18	5322 320 44053	Delay line
A20	5322 216 54284	Final amplifier unit
A23	5322 218 64116	Multiplier assy
A34	5322 216 51042	Driver unit
A4011	5322 209 50116	Prom assy (set of two prom's for instrument S.W.)
	5322 263 74144	Extension card
D406, D407	5322 209 50366	Prom assy (set of two prom's for IEC S.W.)

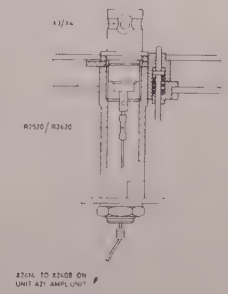

UNIT A101

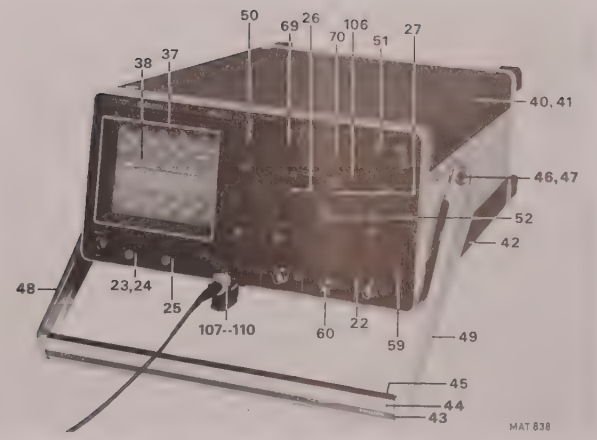

Fig. 12.1.3.

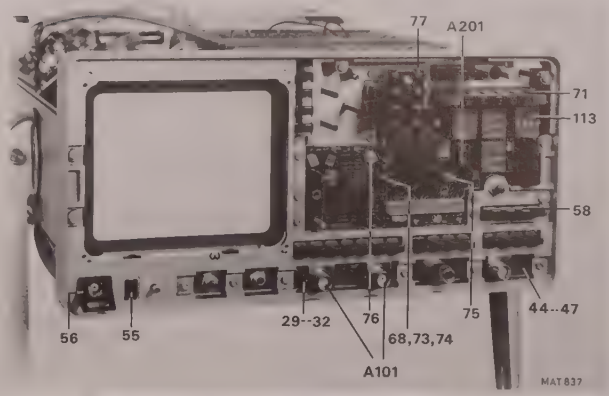

Fig. 12.1.4.

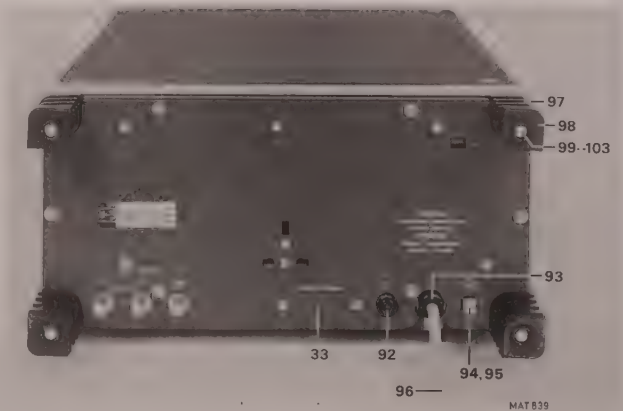

Fig. 12.1.5.

Capacitors

POSNR	DESCRIPTION			ORDERING CODE
C 0200	CAP.ELECTROLYT.	-10+50%	47UF	4822 124 20678
C 0201	CAP.CERAMIC	-20+50%	10NF	4822 122 31414
C 0202	CAP.CERAMIC	-20+50%	10NF	4822 122 31414
C 0203	CAP.CERAMIC	-20+50%	10NF	4822 122 31414
C 0204	CAP.CERAMIC	-20+50%	10NF	4822 122 31414
C 0206	CAP.CERAMIC	-20+50%	10NF	4822 122 31414
C 0207	CAP.ELECTROLYT.	-10+50%	47UF	4822 124 20678
C 0241	CAP.CERAMIC	-20+50%	10NF	4822 122 31414
C 0242	CAP.CERAMIC	-20+50%	10NF	4822 122 31414
C 0243	CAP.CERAMIC	-20+50%	10NF	4822 122 31414
C 0244	CAP.CERAMIC	-20+50%	10NF	4822 122 31414
C 0246	CAP.CERAMIC	-20+50%	10NF	4822 122 31414
C 0247	CAP.CERAMIC	-20+50%	10NF	4822 122 31414
C 0248	CAP.CERAMIC	-20+50%	10NF	4822 122 31414
C 0249	CAP.CERAMIC	-20+50%	10NF	4822 122 31414
C 0251	CAP.CERAMIC	-20+50%	10NF	4822 122 31414
C 0252	CAP.ELECTROLYT.	-10+50%	330UF	4822 124 20684
C 0253	CAP.ELECTROLYT.	-10+50%	47UF	4822 124 20678
C 0254	CAP.CERAMIC	-20+50%	10NF	4822 122 31414
C 0256	CAP.ELECTROLYT.	-10+50%	33UF	4822 124 20688
C 0257	CAP.ELECTROLYT.	-10+50%	33UF	4822 124 20688
C 0258	CAP.ELECTROLYT.	-10+50%	33UF	4822 124 20688
C 0401	CAP.CERAMIC	-20+50%	10NF	4822 122 31414
C 0402	CAP.CERAMIC	-20+50%	10NF	4822 122 31414
C 0403	CAP.CERAMIC	-20+50%	10NF	4822 122 31414
C 0404	CAP.CERAMIC	-20+50%	10NF	4822 122 31414
C 0406	CAP.CERAMIC	-20+50%	10NF	4822 122 31414
C 0407	CAP.CERAMIC	-20+50%	10NF	4822 122 31414
C 0408	CAP.CERAMIC	-20+50%	10NF	4822 122 31414
C 0409	CAP.CERAMIC	2%	27PF	4822 122 30045
C 0410	CAP.CERAMIC	2%	27PF	4822 122 30045
C 0411	CAP.ELECTROLYT.	-10+50%	47UF	4822 124 20678
C 0412	CAP.TANTAL	16V 20%	2.2UF	4822 124 10204
C 0413	CAP.CERAMIC	-20+50%	10NF	4822 122 31414
C 0414	CAP.CERAMIC	-20+50%	10NF	4822 122 31414
C 0416	CAP.CERAMIC	-20+50%	10NF	4822 122 31414
C 0417	CAP.CERAMIC	-20+50%	10NF	4822 122 31414
C 0418	CAP.CERAMIC	-20+50%	10NF	4822 122 31414
C 0419	CAP.CERAMIC	-20+50%	10NF	4822 122 31414
C 0421	CAP.CERAMIC	-20+50%	10NF	4822 122 31414
C 0422	CAP.CERAMIC	-20+50%	10NF	4822 122 31414
C 0423	CAP.CERAMIC	-20+50%	10NF	4822 122 31414
C 0426	CAP.ELECTROLYT.	-10+50%	47UF	4822 124 20678
C 0427	CAP.ELECTROLYT.	-10+50%	47UF	4822 124 20678
C 0428	CAP.CERAMIC	-20+50%	10NF	4822 122 31414
C 0429	CAP.CERAMIC	-20+50%	10NF	4822 122 31414
C 0430	CAP.CERAMIC	-20+50%	10NF	4822 122 31414
C 0431	CAP.CERAMIC	-20+50%	10NF	4822 122 31414
C 0432	CAP.TANTAL	16V 20%	6.8UF	5322 124 14069
C 0433	CAP.TANTAL	16V 20%	6.8UF	5322 124 14069
C 0434	CAP.FOIL	100V 10%	220NF	4822 121 40232
C 0435	CAP.CERAMIC	10%	1NF	4822 122 30027
C 0437	CAP.CERAMIC	10%	1NF	4822 122 30027
C 0438	CAP.CERAMIC	-20+50%	10NF	4822 122 31414
C 0442	CAP.CERAMIC	-20+50%	10NF	4822 122 31414
C 0443	CAP.CERAMIC	-20+50%	10NF	4822 122 31414
C 0601	CAP.CERAMIC	-20+50%	10NF	4822 122 31414
C 0602	CAP.CERAMIC	-20+50%	10NF	4822 122 31414
C 0603	CAP.CERAMIC	-20+50%	10NF	4822 122 31414
C 0604	CAP.CERAMIC	-20+50%	10NF	4822 122 31414

POSNR	DESCRIPTION			ORDERING CODE
C 0606	CAP.CERAMIC	-20+50%	10NF	4822 122 31414
C 0607	CAP.CERAMIC	-20+50%	10NF	4822 122 31414
C 0608	CAP.CERAMIC	-20+50%	10NF	4822 122 31414
C 0609	CAP.CERAMIC	-20+50%	10NF	4822 122 31414
C 0611	CAP.CERAMIC	-20+50%	10NF	4822 122 31414
C 0612	CAP.CERAMIC	-20+50%	10NF	4822 122 31414
C 0613	CAP.ELECTROLYT.	-10+50%	220UF	4822 124 20681
C 0614	CAP.ELECTROLYT.	-10+50%	47UF	4822 124 20678
C 0616	CAP.CERAMIC	-20+50%	10NF	4822 122 31414
C 0617	CAP.CERAMIC	-20+50%	10NF	4822 122 31414
C 0618	CAP.CERAMIC	-20+50%	10NF	4822 122 31414
C 0619	CAP.CERAMIC	-20+50%	10NF	4822 122 31414
C 0621	CAP.CERAMIC	-20+50%	10NF	4822 122 31414
C 0622	CAP.CERAMIC	-20+50%	10NF	4822 122 31414
C 0623	CAP.CERAMIC	-20+50%	10NF	4822 122 31414
C 0624	CAP.CERAMIC	-20+50%	10NF	4822 122 31414
C 0626	CAP.CERAMIC	-20+50%	10NF	4822 122 31414
C 0627	CAP.CERAMIC	-20+50%	10NF	4822 122 31414
C 0628	CAP.CERAMIC	2%	56PF	4822 122 32027
C 0629	CAP.CERAMIC	2%	270PF	4822 122 31331
C 0631	CAP.CERAMIC	10%	1NF	4822 122 30027
C 0632	CAP.CERAMIC	10%	1NF	4822 122 30027
C 0633	CAP.ELECTROLYT.	-10+50%	33UF	4822 124 20688
C 0634	CAP.ELECTROLYT.	-10+50%	33UF	4822 124 20688
C 0636	CAP.ELECTROLYT.	-10+50%	100UF	4822 124 20679
C 0637	CAP.CERAMIC	-20+50%	10NF	4822 122 31414
C 0638	CAP.CERAMIC	-20+50%	10NF	4822 122 31414
C 0639	CAP.CERAMIC	-20+50%	10NF	4822 122 31414
C 0641	CAP.CERAMIC	-20+50%	10NF	4822 122 31414
C 0701	CAP.CERAMIC	-20+50%	10NF	4822 122 31414
C 0702	CAP.CERAMIC	-20+50%	10NF	4822 122 31414
C 0703	CAP.CERAMIC	-20+50%	10NF	4822 122 31414
C 0704	CAP.CERAMIC	-20+50%	10NF	4822 122 31414
C 0706	CAP.CERAMIC	-20+50%	10NF	4822 122 31414
C 0707	CAP.CERAMIC	-20+50%	10NF	4822 122 31414
C 0708	CAP.CERAMIC	-20+50%	10NF	4822 122 31414
C 0709	CAP.CERAMIC	-20+50%	10NF	4822 122 31414
C 0711	CAP.CERAMIC	-20+50%	10NF	4822 122 31414
C 0712	CAP.CERAMIC	-20+50%	10NF	4822 122 31414
C 0713	CAP.CERAMIC	-20+50%	10NF	4822 122 31414
C 0714	CAP.CERAMIC	2%	56PF	4822 122 32027
C 0716	CAP.CERAMIC	10%	1NF	4822 122 30027
C 0717	CAP.CERAMIC	-20+50%	10NF	4822 122 31414
C 0718	CAP.CERAMIC	-20+50%	10NF	4822 122 31414
C 0719	CAP.CERAMIC	-20+50%	10NF	4822 122 31414
C 0721	CAP.CERAMIC	-20+50%	10NF	4822 122 31414
C 0722	CAP.CERAMIC	-20+50%	10NF	4822 122 31414
C 0723	CAP.CERAMIC	-20+50%	10NF	4822 122 31414
C 0724	CAP.FOIL	100V 10%	100NF	5322 121 40323
C 0726	CAP.ELECTROLYT.	-10+50%	330UF	4822 124 20684
C 0801	CAP.CERAMIC	-20+50%	10NF	4822 122 31414
C 0802	CAP.CERAMIC	-20+50%	10NF	4822 122 31414
C 0803	CAP.CERAMIC	-20+50%	10NF	4822 122 31414
C 0804	CAP.CERAMIC	-20+50%	10NF	4822 122 31414
C 0806	CAP.CERAMIC	-20+50%	10NF	4822 122 31414
C 0807	CAP.CERAMIC	-20+50%	10NF	4822 122 31414
C 0808	CAP.CERAMIC	-20+50%	10NF	4822 122 31414
C 0809	CAP.CERAMIC	-20+50%	10NF	4822 122 31414
C 0811	CAP.CERAMIC	-20+50%	10NF	4822 122 31414
C 0812	CAP.CERAMIC	-20+50%	10NF	4822 122 31414
C 0813	CAP.ELECTROLYT.	-10+50%	330UF	4822 124 20684
C 0814	CAP.CERAMIC	-20+50%	10NF	4822 122 31414
C 0816	CAP.CERAMIC	-20+50%	10NF	4822 122 31414
C 0817	CAP.CERAMIC	-20+50%	10NF	4822 122 31414
C 0818	CAP.CERAMIC	-20+50%	10NF	4822 122 31414

POSNR	DESCRIPTION			ORDERING CODE
C 0819	CAP.CERAMIC	-20+50%	10NF	4822 122 31414
C 0821	CAP.ELECTROLYT.	-10+50%	33UF	4822 124 20688
C 0822	CAP.CERAMIC	-20+50%	10NF	4822 122 31414
C 0823	CAP.CERAMIC	-20+50%	10NF	4822 122 31414
C 0824	CAP.ELECTROLYT.	-10+50%	33UF	4822 124 20688
C 0826	CAP.CERAMIC	-20+50%	10NF	4822 122 31414
C 0827	CAP.FOIL	630V 1%	825PF	5322 121 54231
C 0828	CAP.CERAMIC	-20+50%	10NF	4822 122 31414
C 0829	CAP.CERAMIC	-20+50%	10NF	4822 122 31414
C 0901	CAP.CERAMIC	-20+50%	10NF	4822 122 31414
C 0902	CAP.CERAMIC	-20+50%	10NF	4822 122 31414
C 0903	CAP.CERAMIC	-20+50%	10NF	4822 122 31414
C 0904	CAP.CERAMIC	-20+50%	10NF	4822 122 31414
C 0905	CAP.CERAMIC	10%	470PF	4822 122 30034
C 0906	CAP.CERAMIC	-20+50%	10NF	4822 122 31414
C 0907	CAP.CERAMIC	-20+50%	10NF	4822 122 31414
C 0908	CAP.CERAMIC	-20+50%	10NF	4822 122 31414
C 0909	CAP.CERAMIC	-20+50%	10NF	4822 122 31414
C 0911	CAP.CERAMIC	10%	1NF	4822 122 30027
C 0912	CAP.CERAMIC	-20+50%	10NF	4822 122 31414
C 0913	CAP.CERAMIC	2%	56PF	4822 122 32027
C 0914	CAP.CERAMIC	-20+50%	10NF	4822 122 31414
C 0915	CAP.CERAMIC	2%	220PF	5322 122 34047
C 0916	CAP.FOIL	100V 10%	100NF	5322 121 40323
C 0917	CAP.CERAMIC	-20+50%	10NF	4822 122 31414
C 0918	CAP.CERAMIC	-20+50%	10NF	4822 122 31414
C 0919	CAP.CERAMIC	-20+50%	10NF	4822 122 31414
C 0920	CAP.CERAMIC	2%	220PF	5322 122 34047
C 0921	CAP.CERAMIC	-20+50%	10NF	4822 122 31414
C 0922	CAP.CERAMIC	-20+50%	10NF	4822 122 31414
C 0923	CAP.CERAMIC	-20+50%	10NF	4822 122 31414
C 0924	CAP.CERAMIC	-20+50%	10NF	4822 122 31414
C 0925	CAP.CERAMIC	10%	470PF	4822 122 30034
C 0926	CAP.CERAMIC	-20+50%	10NF	4822 122 31414
C 0927	CAP.CERAMIC	-20+50%	10NF	4822 122 31414
C 0928	CAP.CERAMIC	-20+50%	10NF	4822 122 31414
C 0929	CAP.ELECTROLYT.	-10+50%	330UF	4822 124 20684
C 0931	CAP.CERAMIC	-20+50%	10NF	4822 122 31414
C 0932	CAP.CERAMIC	-20+50%	10NF	4822 122 31414
C 0933	CAP.CERAMIC	-20+50%	10NF	4822 122 31414
C 0934	CAP.CERAMIC	-20+50%	10NF	4822 122 31414
C 1101	CAP.ELECTROLYT.	-10+50%	33UF	4822 124 20688
C 1102	CAP.ELECTROLYT.	-10+50%	33UF	4822 124 20688
C 1103	CAP.ELECTROLYT.	-10+50%	33UF	4822 124 20688
C 1104	CAP.CERAMIC	63V 10%	100NF	5322 122 32049
C 1105	CAP.CERAMIC	-20+50%	10NF	4822 122 31414
C 1106	CAP.TANTAL	40V 20%	1.5UF	5322 124 14078
C 1107	CAP.ELECTROLYT.	-10+50%	15UF	4822 124 20709
C 1108	CAP.CERAMIC	0.25PF	8.2PF	4822 122 31052
C 1109	CAP.CERAMIC	0.25PF	8.2PF	4822 122 31052
C 1111	CAP.CERAMIC	10%	1NF	4822 122 30027
C 1112	CAP.TANTAL	40V 20%	680NF	5322 124 14039
C 1113	CAP.CERAMIC	63V 10%	100NF	5322 122 32049
C 1114	CAP.CERAMIC	63V 10%	100NF	5322 122 32049
C 1116	CAP.CERAMIC	10%	1NF	4822 122 30027
C 1117	CAP.ELECTROLYT.	-10+50%	15UF	4822 124 20709
C 1118	CAP.CERAMIC	63V 10%	100NF	5322 122 32049
C 1119	CAP.CERAMIC	63V 10%	100NF	5322 122 32049
C 1121	CAP.CERAMIC	63V 10%	100NF	5322 122 32049
C 1122	CAP.CERAMIC	2%	220PF	5322 122 34047
C 1123	CAP.CERAMIC	2%	220PF	5322 122 34047
C 1124	CAP.ELECTROLYT.	-10+50%	15UF	4822 124 20709
C 1126	CAP.CERAMIC	10%	1NF	4822 122 30027
C 1128	CAP.CERAMIC	63V 10%	100NF	5322 122 32049
C 1129	CAP.CERAMIC	63V 10%	100NF	5322 122 32049

POSNR	DESCRIPTION			ORDERING CODE
C 1131	CAP.TANTAL	40V 20%	680NF	5322 124 14039
C 1132	CAP.CERAMIC	63V 10%	100NF	5322 122 32049
C 1133	CAP.SOLID ALU.	25V 20%	6.8UF	5322 124 14081
C 1134	CAP.ELECTROLYT.	-10+50%	15UF	4822 124 20709
C 1136	CAP.CERAMIC	0.25PF	8.2PF	4822 122 31052
C 1137	CAP.CERAMIC	0.25PF	8.2PF	4822 122 31052
C 1138	CAP.CERAMIC	10%	1NF	4822 122 30027
C 1139	CAP.ELECTROLYT.	-10+50%	15UF	4822 124 20709
C 1141	CAP.TANTAL	40V 20%	1.5UF	5322 124 14078
C 1142	CAP.TANTAL	40V 20%	1.5UF	5322 124 14078
C 1201	CAP.CERAMIC	-20+50%	10NF	4822 122 31414
C 1202	CAP.CERAMIC	-20+50%	10NF	4822 122 31414
C 1203	CAP.CERAMIC	-20+50%	10NF	4822 122 31414
C 1204	CAP.CERAMIC	-20+50%	10NF	4822 122 31414
C 1205	CAP.CERAMIC	-20+50%	10NF	4822 122 31414
C 1206	CAP.CERAMIC	-20+50%	10NF	4822 122 31414
C 1207	CAP.CERAMIC	-20+50%	10NF	4822 122 31414
C 1208	CAP.CERAMIC	63V 10%	100NF	5322 122 32049
C 1209	CAP.CERAMIC	-20+50%	10NF	4822 122 31414
C 1210	CAP.CERAMIC	63V 10%	100NF	5322 122 32049
C 1211	CAP.CERAMIC	10%	1NF	4822 122 30027
C 1212	CAP.CERAMIC	-20+50%	10NF	4822 122 31414
C 1213	CAP.TRIMMER	300V	1.8/10PF	5322 125 50049
C 1214	CAP.CERAMIC	-20+50%	10NF	4822 122 31414
C 1215	CAP.CERAMIC	-20+50%	10NF	4822 122 31414
C 1216	CAP.CERAMIC	63V 10%	100NF	5322 122 32049
C 1217	CAP.CERAMIC	-20+50%	10NF	4822 122 31414
C 1218	CAP.CERAMIC	-20+50%	10NF	4822 122 31414
C 1219	CAP.CERAMIC	-20+50%	10NF	4822 122 31414
C 1220	CAP.CERAMIC	63V 10%	100NF	5322 122 32049
C 1221	CAP.CERAMIC	-20+50%	10NF	4822 122 31414
C 1222	CAP.CERAMIC	-20+50%	10NF	4822 122 31414
C 1223	CAP.CERAMIC	-20+50%	10NF	4822 122 31414
C 1224	CAP.CERAMIC	-20+50%	10NF	4822 122 31414
C 1225	CAP.CERAMIC	63V 10%	100NF	5322 122 32049
C 1226	CAP.CERAMIC	-20+50%	10NF	4822 122 31414
C 1227	CAP.CERAMIC	63V 10%	100NF	5322 122 32049
C 1228	CAP.CERAMIC	-20+50%	10NF	4822 122 31414
C 1229	CAP.CERAMIC	-20+50%	10NF	4822 122 31414
C 1231	CAP.CERAMIC	63V 10%	100NF	5322 122 32049
C 1232	CAP.CERAMIC	63V 10%	100NF	5322 122 32049
C 1233	CAP.ELECTROLYT.	-10+50%	47UF	4822 124 20678
C 1234	CAP.ELECTROLYT.	-10+50%	47UF	4822 124 20678
C 1236	CAP.ELECTROLYT.	-10+50%	47UF	4822 124 20678
C 1237	CAP.ELECTROLYT.	-10+50%	33UF	4822 124 20688
C 1238	CAP.ELECTROLYT.	-10+50%	33UF	4822 124 20688
C 1239	CAP.ELECTROLYT.	-10+50%	330UF	4822 124 20684
C 1240	CAP.ELECTROLYT.	-10+50%	330UF	4822 124 20684
C 1241	CAP.ELECTROLYT.	-10+50%	330UF	4822 124 20684
C 1250	CAP.CERAMIC	-20+50%	10NF	4822 122 31414
C 1251	CAP.CERAMIC	-20+50%	10NF	4822 122 31414
C 1252	CAP.CERAMIC	-20+50%	10NF	4822 122 31414
C 1253	CAP.CERAMIC	-20+50%	10NF	4822 122 31414
C 1254	CAP.CERAMIC	2%	56PF	4822 122 32027
C 1255	CAP.CERAMIC	-20+50%	10NF	4822 122 31414
C 1256	CAP.CERAMIC	-20+50%	10NF	4822 122 31414
C 1257	CAP.CERAMIC	-20+50%	10NF	4822 122 31414
C 1301	CAP.CERAMIC	-20+50%	10NF	4822 122 31414
C 1302	CAP.CERAMIC	-20+50%	10NF	4822 122 31414
C 1303	CAP.CERAMIC	-20+50%	10NF	4822 122 31414

POSNR	DESCRIPTION		ORDERING CODE
C 1304	CAP.CERAMIC	-20+50% 10NF	4822 122 31414
C 1306	CAP.CERAMIC	-20+50% 10NF	4822 122 31414
C 1307	CAP.CERAMIC	-20+50% 10NF	4822 122 31414
C 1308	CAP.CERAMIC	-20+50% 10NF	4822 122 31414
C 1309	CAP.CERAMIC	-20+50% 10NF	4822 122 31414
C 1311	CAP.CERAMIC	-20+50% 10NF	4822 122 31414
C 1312	CAP.CERAMIC	-20+50% 10NF	4822 122 31414
C 1313	CAP.CERAMIC	-20+50% 10NF	4822 122 31414
C 1314	CAP.ELECTROLYT.	-10+50% 47UF	4822 124 20678
C 1316	CAP.ELECTROLYT.	-10+50% 47UF	4822 124 20678
C 1317	CAP.FOIL	630V 1% 1NF	4822 121 50591
C 1318	CAP.CERAMIC	-20+50% 10NF	4822 122 31414
C 1319	CAP.ELECTROLYT.	-10+50% 33UF	4822 124 20688
C 1321	CAP.CERAMIC	-20+50% 10NF	4822 122 31414
C 1322	CAP.CERAMIC	-20+50% 10NF	4822 122 31414
C 1323	CAP.CERAMIC	-20+50% 10NF	4822 122 31414
C 1324	CAP.CERAMIC	-20+50% 10NF	4822 122 31414
C 1326	CAP.CERAMIC	10% 1NF	4822 122 30027
C 1327	CAP.FOIL	630V 1% 1NF	4822 121 50591
C 1328	CAP.FOIL	100V 10% 100NF	5322 121 40323
C 1329	CAP.ELECTROLYT.	-10+50% 33UF	4822 124 20688
C 1331	CAP.CERAMIC	2% 56PF	4822 122 32027
C 1332	CAP.CERAMIC	-20+50% 10NF	4822 122 31414
C 1333	CAP.ELECTROLYT.	-10+50% 10UF	4822 124 20728
C 1334	CAP.CERAMIC	2% 100PF	4822 122 31316
C 1501	CAP.PAPER	250V 10% 47NF	5322 121 44138
C 1502	CAP.FOIL	1600V 10% 15NF	4822 121 40123
C 1503	CAP.FOIL	1600V 10% 15NF	4822 121 40123
C 1504	CAP.HI-TENSION	2KV 10% 470PF	5322 122 54019
C 1506	CAP.HI-TENSION	-+20% 470PF	5322 122 54004
C 1507	CAP.ELECTROLYT.	-10+50% 10UF	4822 124 20728
C 1508	CAP.ELECTROLYT.	-10+50% 47UF	4822 124 20733
C 1509	CAP.ELECTROLYT.	-10+50% 330UF	4822 124 20684
C 1511	CAP.ELECTROLYT.	-10+50% 330UF	4822 124 20684
C 1512	CAP.ELECTROLYT.	-10+50% 1000UF	4822 124 20786
C 1513	CAP.ELECTROLYT.	-10+50% 1000UF	4822 124 20786
C 1514	CAP.CERAMIC	2% 100PF	4822 122 31316
C 1516	CAP.CERAMIC	2% 100PF	4822 122 31316
C 1517	CAP.FOIL	630V 10% 68NF	4822 121 40279
C 1518	CAP.HI-TENSION	2KV 10% 470PF	5322 122 54019
C 1519	CAP.FOIL	630V 10% 68NF	4822 121 40279
C 1521	CAP.HI-TENSION	2KV 10% 470PF	5322 122 54019
C 1522	CAP.HI-TENSION	2KV 10% 470PF	5322 122 54019
C 1523	CAP.FOIL	250V 10% 150NF	5322 121 40307
C 1524	CAP.FOIL	250V 10% 150NF	5322 121 40307
C 1526	CAP.ELECTROLYT.	-10+50% 2200UF	4822 124 20771
C 1527	CAP.ELECTROLYT.	-10+50% 2200UF	4822 124 20771
C 1528	CAP.ELECTROLYT.	-10+50% 33UF	4822 124 20688
C 1529	CAP.FOIL	250V 10% 150NF	5322 121 40307
C 1531	CAP.FOIL	250V 10% 150NF	5322 121 40307
C 1532	CAP.FOIL	100V 10% 100NF	5322 121 40323
C 1533	CAP.ELECTROLYT.	-10+50% 10UF	4822 124 20728
C 1534	CAP.ELECTROLYT.	-10+50% 33UF	4822 124 20688
C 1536	CAP.ELECTROLYT.	-10+50% 47UF	4822 124 20678
C 1537	CAP.FOIL	250V 10% 1UF	4822 121 42053
C 1538	CAP.FOIL	250V 10% 68NF	5322 121 44137
C 1539	CAP.CERAMIC	-20+50% 10NF	4822 122 31414
C 1541	CAP.FOIL	400V 10% 10NF	5322 121 44201
C 1542	CAP.FOIL	250V 10% 1UF	4822 121 42053
C 1543	CAP.FOIL	400V 10% 33NF	5322 121 44025
C 1544	CAP.CERAMIC	2% 12PF	4822 122 31056
C 1546	CAP.FOIL	100V 10% 100NF	5322 121 40323
C 1547	CAP.FOIL	100V 10% 150NF	4822 121 40231
C 1548	CAP.FOIL	250V 10% 68NF	5322 121 44137
C 1549	CAP.CERAMIC	10% 560PF	4822 122 30126

POSNR	DESCRIPTION		ORDERING CODE
C 1551	CAP.CERAMIC	10% 560PF	4822 122 30126
C 1552	CAP.ELECTROLYT.	-10+50% 330UF	4822 124 20684
C 1553	CAP.ELECTROLYT.	-10+50% 10UF	4822 124 20728
C 1554	CAP.FOIL	100V 10% 150NF	4822 121 40231
C 1555	CAP.CERAMIC	10% 1NF	4822 122 30027
C 1556	CAP.CERAMIC	-20+50% 10NF	4822 122 31414
C 1557	CAP.CERAMIC	-20+50% 10NF	4822 122 31414
C 1558	CAP.CERAMIC	-20+50% 10NF	4822 122 31414
C 1601	CAP.FOIL	630V 10% 68NF	4822 121 40279
C 1602	CAP.FOIL	1500V 5% 12NF	5322 121 44333
C 1603	CAP.FOIL	1500V 5% 12NF	5322 121 44333
C 1604	CAP.	-10+30% 220UF	4822 124 70344
C 1606	CAP.	-10+30% 220UF	4822 124 70344
C 1607	CAP.HI-TENSION	2KV 10% 270PF	5322 122 54024
C 1608	CAP.PAPER	250V 10% 220NF	5322 121 44142
C 1609	CAP.ELECTROLYT.	-10+50% 10UF	4822 124 20728
C 1610	CAP.CERAMIC	10% 1.8NF	4822 122 30048
C 1611	CAP.ELECTROLYT.	-10+50% 10UF	4822 124 20728
C 1612	CAP.FOIL	100V 10% 220NF	4822 121 40232
C 1613	CAP.FOIL	400V 10% 22NF	5322 121 40308
C 1614	CAP.FOIL	400V 10% 22NF	5322 121 40308
C 1616	CAP.FOIL	100V 10% 100NF	5322 121 40323
C 1617	CAP.CERAMIC	10% 2.2NF	4822 122 30114
C 1618	CAP.FOIL	250V 10% 68NF	5322 121 44137
C 1619	CAP.FOIL	63V 1% 3.32NF	4822 121 50654
C 1620	CAP.HI-TENSION	2KV 10% 470PF	5322 122 54019
C 1621	CAP.ELECTROLYT.	-10+50% 47UF	4822 124 20678
C 1622	CAP.ELECTROLYT.	-10+50% 22UF	4822 124 20698
C 1623	CAP.ELECTROLYT.	-10+50% 22UF	4822 124 20698
C 1624	CAP.CERAMIC	10% 1NF	4822 122 30027
C 1625	CAP.HI-TENSION	2KV 10% 470PF	5322 122 54019
C 1701	CAP.FOIL	100V 10% 100NF	4822 121 40036
C 1702	CAP.FOIL	100V 10% 100NF	4822 121 40036
C 2001	CAP.CERAMIC	-20+50% 10NF	4822 122 31414
C 2002	CAP.CERAMIC	-20+50% 10NF	4822 122 31414
C 2003	CAP.CERAMIC	-20+50% 10NF	4822 122 31414
C 2004	CAP.CERAMIC	-20+50% 10NF	4822 122 31414
C 2006	CAP.CERAMIC	-20+50% 10NF	4822 122 31414
C 2007	CAP.FOIL	630V 1% 1NF	4822 121 50591
C 2008	CAP.CERAMIC	2% 220PF	5322 122 34047
C 2009	CAP.CERAMIC	-20+50% 10NF	4822 122 31414
C 2011	CAP.CERAMIC	-20+50% 10NF	4822 122 31414
C 2012	CAP.CERAMIC	-20+50% 10NF	4822 122 31414
C 2013	CAP.CERAMIC	-20+50% 10NF	4822 122 31414
C 2014	CAP.FOIL	630V 1% 511PF	5322 121 54229
C 2016	CAP.CERAMIC	-20+50% 10NF	4822 122 31414
C 2017	CAP.CERAMIC	-20+50% 10NF	4822 122 31414
C 2018	CAP.CERAMIC	-20+50% 10NF	4822 122 31414
C 2019	CAP.CERAMIC	-20+50% 10NF	4822 122 31414
C 2021	CAP.CERAMIC	-20+50% 10NF	4822 122 31414
C 2022	CAP.CERAMIC	-20+50% 10NF	4822 122 31414
C 2023	CAP.CERAMIC	-20+50% 10NF	4822 122 31414
C 2024	CAP.CERAMIC	-20+50% 10NF	4822 122 31414
C 2026	CAP.CERAMIC	-20+50% 10NF	4822 122 31414
C 2027	CAP.FOIL	630V 1% 511PF	5322 121 54229
C 2028	CAP.FOIL	630V 1% 511PF	5322 121 54229
C 2029	CAP.CERAMIC	-20+50% 10NF	4822 122 31414
C 2030	CAP.CERAMIC	2% 82PF	5322 122 31577
C 2031	CAP.CERAMIC	-20+50% 10NF	4822 122 31414
C 2032	CAP.CERAMIC	-20+50% 10NF	4822 122 31414

POSNR	DESCRIPTION		ORDERING CODE
C 2033	CAP.FOIL	250V 10% 68NF	5322 121 44137
C 2034	CAP.CERAMIC	-20+50% 10NF	4822 122 31414
C 2036	CAP.ELECTROLYT.	-10+50% 150UF	4822 124 20691
C 2037	CAP.ELECTROLYT.	-10+50% 33UF	4822 124 20688
C 2038	CAP.FOIL	100V 10% 220NF	4822 121 40232
C 2039	CAP.FOIL	250V 10% 68NF	5322 121 44137
C 2041	CAP.FOIL	630V 1% 511PF	5322 121 54229
C 2042	CAP.CERAMIC	-20+50% 10NF	4822 122 31414
C 2043	CAP.FOIL	630V 1% 511PF	5322 121 54229
C 2400	CAP.ELECTROLYT.	-10+50% 47UF	4822 124 20678
C 2401	CAP.CERAMIC	-20+50% 10NF	4822 122 31414
C 2402	CAP.CERAMIC	-20+50% 10NF	4822 122 31414
C 2403	CAP.CERAMIC	-20+50% 10NF	4822 122 31414
C 2404	CAP.CERAMIC	-20+50% 10NF	4822 122 31414
C 2405	CAP.CERAMIC	0.25PF 1.5PF	5322 122 32101
C 2406	CAP.CERAMIC	-20+50% 10NF	4822 122 31414
C 2407	CAP.CERAMIC	2% 22PF	4822 122 31063
C 2408	CAP.CERAMIC	-20+50% 10NF	4822 122 31414
C 2409	CAP.TRIMMER	400V 5.5PF	5322 125 54027
C 2410	CAP.CERAMIC	0.25PF 3.9PF	4822 122 31217
C 2411	CAP.CERAMIC	-20+50% 10NF	4822 122 31414
C 2412	CAP.CERAMIC	-20+50% 10NF	4822 122 31414
C 2413	CAP.FEEDTHR.	10% 300PF	5322 123 10168
C 2414	CAP.FOIL	630V 10% 22NF	4822 121 40407
C 2415	CAP.CERAMIC	-20+50% 10NF	4822 122 31414
C 2416	CAP.TRIMMER	400V 3PF	5322 125 54026
C 2417	CAP.CERAMIC	-20+50% 10NF	4822 122 31414
C 2418	CAP.CERAMIC	-20+50% 10NF	4822 122 31414
C 2419	CAP.CERAMIC	-20+50% 10NF	4822 122 31414
C 2420	CAP.CERAMIC	-20+50% 10NF	4822 122 31414
C 2421	CAP.CERAMIC	-20+50% 10NF	4822 122 31414
C 2422	CAP.CERAMIC	-20+50% 10NF	4822 122 31414
C 2423	CAP.CERAMIC	2% 39PF	4822 122 31069
C 2424	CAP.TRIMMER	300V 2/18PF	5322 125 50051
C 2425	CAP.CERAMIC	-20+50% 10NF	4822 122 31414
C 2426	CAP.CERAMIC	-20+50% 10NF	4822 122 31414
C 2427	CAP.TRIMMER	400V 5.5PF	5322 125 54027
C 2428	CAP.CERAMIC	10% 560PF	5322 122 32019
C 2429	CAP.CERAMIC	-20+50% 10NF	4822 122 31414
C 2430	CAP.CERAMIC	10% 470PF	4822 122 30034
C 2431	CAP.CERAMIC	2% 68PF	4822 122 31207
C 2432	CAP.CERAMIC	-20+50% 10NF	4822 122 31414
C 2433	CAP.CERAMIC	-20+50% 10NF	4822 122 31414
C 2434	CAP.CERAMIC	-20+50% 10NF	4822 122 31414
C 2435	CAP.CERAMIC	-20+50% 10NF	4822 122 31414
C 2436	CAP.CERAMIC	10% 1NF	4822 122 30027
C 2437	CAP.CERAMIC	0.25PF 1.5PF	5322 122 32101
C 2438	CAP.CERAMIC	-20+50% 10NF	4822 122 31414
C 2439	CAP.CERAMIC	2% 39PF	4822 122 31069
C 2440	CAP.CERAMIC	-20+50% 10NF	4822 122 31414
C 2441	CAP.CERAMIC	2% 39PF	4822 122 31069
C 2442	CAP.TRIMMER	400V 5.5PF	5322 125 54027
C 2443	CAP.FEEDTHR	10% 30PF	5322 123 34001
C 2444	CAP.TRIMMER	400V 3PF	5322 125 54026
C 2445	CAP.CERAMIC	0.25PF 3.9PF	4822 122 31217
C 2446	CAP.CERAMIC	10% 470PF	4822 122 30034
C 2447	CAP.TRIMMER	300V 2/18PF	5322 125 50051
C 2448	CAP.CERAMIC	-20+50% 10NF	4822 122 31414
C 2449	CAP.CERAMIC	0.25PF 2.2PF	4822 122 31036
C 2450	CAP.CERAMIC	0.25PF 2.2PF	4822 122 31036

POSNR	DESCRIPTION			ORDERING CODE
C 2451	CAP.CERAMIC	-20+50%	10NF	4822 122 31414
C 2452	CAP.CERAMIC	-20+50%	10NF	4822 122 31414
C 2453	CAP.CERAMIC	-20+50%	10NF	4822 122 31414
C 2454	CAP.CERAMIC	2%	10PF	4822 122 32185
C 2455	CAP.CERAMIC	-20+50%	10NF	4822 122 31414
C 2456	CAP.CERAMIC	2%	22PF	4822 122 31063
C 2457	CAP.CERAMIC	-20+50%	10NF	4822 122 31414
C 2458	CAP.CERAMIC	-20+50%	10NF	4822 122 31414
C 2459	CAP.CERAMIC	2%	22PF	4822 122 31063
C 2460	CAP.CERAMIC	-20+50%	10NF	4822 122 31414
C 2461	CAP.CERAMIC	-20+50%	10NF	4822 122 31414
C 2462	CAP.CERAMIC	-20+50%	10NF	4822 122 31414
C 2463	CAP.CERAMIC	-20+50%	10NF	4822 122 31414
C 2464	CAP.CERAMIC	-20+50%	10NF	4822 122 31414
C 2465	CAP.CERAMIC	-20+50%	10NF	4822 122 31414
C 2466	CAP.CERAMIC	-20+50%	10NF	4822 122 31414
C 2467	CAP.FOIL	100V 10%	100NF	5322 121 40323
C 2468	CAP.CERAMIC	-20+50%	10NF	4822 122 31414
C 2469	CAP.CERAMIC	-20+50%	10NF	4822 122 31414
C 2470	CAP.CERAMIC	0.25PF	1.5PF	5322 122 32101
C 2471	CAP.CERAMIC	-20+50%	10NF	4822 122 31414
C 2472	CAP.CERAMIC	-20+50%	10NF	4822 122 31414
C 2473	CAP.CERAMIC	2%	22PF	4822 122 31063
C 2474	CAP.CERAMIC	-20+50%	10NF	4822 122 31414
C 2475	CAP.CERAMIC	0.25PF	3.9PF	4822 122 31217
C 2476	CAP.FOIL	630V 10%	22NF	4822 121 40407
C 2477	CAP.TRIMMER	400V	5.5PF	5322 125 54027
C 2478	CAP.CERAMIC	-20+50%	10NF	4822 122 31414
C 2479	CAP.CERAMIC	-20+50%	10NF	4822 122 31414
C 2480	CAP.CERAMIC	-20+50%	10NF	4822 122 31414
C 2481	CAP.CERAMIC	-20+50%	10NF	4822 122 31414
C 2482	CAP.CERAMIC	-20+50%	10NF	4822 122 31414
C 2483	CAP.FEEDTHR	10%	300PF	5322 123 10168
C 2484	CAP.TRIMMER	400V	3PF	5322 125 54026
C 2485	CAP.CERAMIC	-20+50%	10NF	4822 122 31414
C 2486	CAP.CERAMIC	-20+50%	10NF	4822 122 31414
C 2487	CAP.CERAMIC	-20+50%	10NF	4822 122 31414
C 2488	CAP.CERAMIC	-20+50%	10NF	4822 122 31414
C 2489	CAP.CERAMIC	-20+50%	10NF	4822 122 31414
C 2490	CAP.CERAMIC	2%	39PF	4822 122 31069
C 2491	CAP.CERAMIC	-20+50%	10NF	4822 122 31414
C 2492	CAP.CERAMIC	-20+50%	10NF	4822 122 31414
C 2493	CAP.CERAMIC	-20+50%	10NF	4822 122 31414
C 2493	CAP.TRIMMER	300V	1.8/10PF	5322 125 50049
C 2494	CAP.CERAMIC	10%	1NF	4822 122 30027
C 2494	CAP.ELECTROLYT.	-10+50%	47UF	4822 124 20678
C 2495	CAP.CERAMIC	-20+50%	10NF	4822 122 31414
C 2496	CAP.TRIMMER	300V	2/18PF	5322 125 50051
C 2497	CAP.CERAMIC	-20+50%	10NF	4822 122 31414
C 2498	CAP.CERAMIC	-20+50%	10NF	4822 122 31414
C 2499	CAP.CERAMIC	2%	22PF	4822 122 31063
C 2500	CAP.CERAMIC	2%	10PF	4822 122 32185
C 2501	CAP.ELECTROLYT.	-10+50%	220UF	4822 124 20693
C 2502	CAP.ELECTROLYT.	-10+50%	220UF	4822 124 20693
C 2503	CAP.TRIMMER	400V	5.5PF	5322 125 54027
C 2504	CAP.CERAMIC	10%	560PF	5322 122 32019
C 2505	CAP.CHIP	0.25PF	4.7PF	4822 122 31822
C 2506	CAP.CERAMIC	-20+50%	10NF	4822 122 31414
C 2507	CAP.CERAMIC	2%	68PF	4822 122 31207
C 2508	CAP.CERAMIC	-20+50%	10NF	4822 122 31414

POSNR	DESCRIPTION			ORDERING CODE
C 2509	CAP.CERAMIC	-20+50%	10NF	4822 122 31414
C 2510	CAP.CERAMIC	10%	470PF	4822 122 30034
C 2511	CAP.CERAMIC	-20+50%	10NF	4822 122 31414
C 2512	CAP.CERAMIC	10%	1NF	4822 122 30027
C 2513	CAP.CERAMIC	0.25PF	1.5PF	5322 122 32101
C 2514	CAP.CERAMIC	-20+50%	10NF	4822 122 31414
C 2515	CAP.CERAMIC	0.25PF	3.9PF	4822 122 31217
C 2516	CAP.CERAMIC	2%	39PF	4822 122 31069
C 2517	CAP.CERAMIC	2%	39PF	4822 122 31069
C 2518	CAP.TRIMMER	400V	5.5PF	5322 125 54027
C 2519	CAP.FEEDTHR	10%	30PF	5322 123 34001
C 2520	CAP.CERAMIC	-20+50%	10NF	4822 122 31414
C 2521	CAP.TRIMMER	400V	3PF	5322 125 54026
C 2522	CAP.CERAMIC	10%	470PF	4822 122 30034
C 2523	CAP.TRIMMER	300V	2/18PF	5322 125 50051
C 2524	CAP.CERAMIC	-20+50%	10NF	4822 122 31414
C 2525	CAP.CERAMIC	-20+50%	10NF	4822 122 31414
C 2526	CAP.CERAMIC	-20+50%	10NF	4822 122 31414
C 2527	CAP.CERAMIC	-20+50%	10NF	4822 122 31414
C 2528	CAP.CERAMIC	2%	10PF	4822 122 32185
C 2529	CAP.CERAMIC	-20+50%	10NF	4822 122 31414
C 2530	CAP.CERAMIC	-20+50%	10NF	4822 122 31414
C 2531	CAP.CERAMIC	-20+50%	10NF	4822 122 31414
C 2532	CAP.CERAMIC	2%	22PF	4822 122 31063
C 2533	CAP.CERAMIC	-20+50%	10NF	4822 122 31414
C 2534	CAP.CERAMIC	-20+50%	10NF	4822 122 31414
C 2535	CAP.SOLID ALU.	16V 20%	15UF	4822 124 20977
C 2536	CAP.CERAMIC	-20+50%	10NF	4822 122 31414
C 2537	CAP.CERAMIC	-20+50%	10NF	4822 122 31414
C 2538	CAP.CERAMIC	-20+50%	10NF	4822 122 31414
C 2539	CAP.ELECTROLYT.	-10+50%	220UF	4822 124 20693
C 2540	CAP.ELECTROLYT.	-10+50%	680UF	4822 124 20776
C 2541	CAP.CERAMIC	-20+50%	10NF	4822 122 31414
C 2542	CAP.CERAMIC	-20+50%	10NF	4822 122 31414
C 2543	CAP.ELECTROLYT.	-10+50%	220UF	4822 124 20693
C 2544	CAP.CERAMIC	-20+50%	10NF	4822 122 31414
C 2545	CAP.ELECTROLYT.	-10+50%	100UF	4822 124 20679
C 2546	CAP.CERAMIC	-20+50%	10NF	4822 122 31414
C 2547	CAP.CERAMIC	-20+50%	10NF	4822 122 31414
C 2548	CAP.CERAMIC	-20+50%	10NF	4822 122 31414
C 2549	CAP.ELECTROLYT.	-10+50%	100UF	4822 124 20679
C 2550	CAP.ELECTROLYT.	-10+50%	47UF	4822 124 20678
C 2551	CAP.CERAMIC	-20+50%	10NF	4822 122 31414
C 2552	CAP.CERAMIC	-20+50%	10NF	4822 122 31414
C 2553	CAP.CERAMIC	-20+50%	10NF	4822 122 31414
C 2554	CAP.CERAMIC	-20+50%	10NF	4822 122 31414
C 2555	CAP.ELECTROLYT.	-10+50%	47UF	4822 124 20678
C 2556	CAP.CERAMIC	-20+50%	10NF	4822 122 31414
C 2557	CAP.CERAMIC	-20+50%	10NF	4822 122 31414
C 2558	CAP.CERAMIC	-20+50%	10NF	4822 122 31414
C 2559	CAP.CERAMIC	-20+50%	10NF	4822 122 31414
C 2560	CAP.TRIMMER	300V	1.8/10PF	5322 125 50049
C 2561	CAP.CERAMIC	-20+50%	10NF	4822 122 31414
C 2562	CAP.CERAMIC	-20+50%	10NF	4822 122 31414
C 2563	CAP.CERAMIC	-20+50%	10NF	4822 122 31414
C 2564	CAP.CERAMIC	-20+50%	10NF	4822 122 31414
C 2565	CAP.CERAMIC	2%	10PF	4822 122 32185
C 2566	CAP.CERAMIC	-20+50%	10NF	4822 122 31414
C 2567	CAP.CERAMIC	-20+50%	10NF	4822 122 31414
C 2568	CAP.SOLID ALU.	16V 20%	3.3UF	4822 124 20947
C 2569	CAP.CERAMIC	-20+50%	10NF	4822 122 31414
C 2570	CAP.CERAMIC	-20+50%	10NF	4822 122 31414
C 2571	CAP.CERAMIC	-20+50%	10NF	4822 122 31414
C 2572	CAP.CERAMIC	-20+50%	10NF	4822 122 31414
C 2573	CAP.CERAMIC	-20+50%	10NF	4822 122 31414

POSNR	DESCRIPTION			ORDERING CODE
C 2574	CAP.CERAMIC	-20+50%	10NF	4822 122 31414
C 2575	CAP.CERAMIC	-20+50%	10NF	4822 122 31414
C 2576	CAP.CERAMIC	-20+50%	10NF	4822 122 31414
C 2577	CAP.CERAMIC	10%	2.2NF	4822 122 30114
C 2578	CAP.CERAMIC	10%	2.2NF	4822 122 30114
C 2579	CAP.CERAMIC	10%	2.2NF	4822 122 30114
C 2580	CAP.CERAMIC	10%	2.2NF	4822 122 30114
C 2581	CAP.CERAMIC	0.25PF	1.5PF	5322 122 32101
C 2582	CAP.CHIP	0.25PF	4.7PF	4822 122 31822
C 2585	CAP.CERAMIC	0.25PF	6.8PF	4822 122 31049
C 2586	CAP.CERAMIC	0.25PF	6.8PF	4822 122 31049
C 2587	CAP.CERAMIC	-20+50%	10NF	4822 122 31414
C 2588	CAP.CERAMIC	-20+50%	10NF	4822 122 31414
C 2589	CAP.CERAMIC	-20+50%	10NF	4822 122 31414
C 2590	CAP.CERAMIC	-20+50%	10NF	4822 122 31414
C 2591	CAP.ELECTROLYT.	-10+50%	47UF	4822 124 20678
C 2593	CAP.CERAMIC	-20+50%	10NF	4822 122 31414
C 2594	CAP.CERAMIC	-20+50%	10NF	4822 122 31414
C 2595	CAP.CERAMIC	-20+50%	10NF	4822 122 31414
C 2596	CAP.CERAMIC	-20+50%	10NF	4822 122 31414
C 2597	CAP.CERAMIC	-20+50%	10NF	4822 122 31414
C 2598	CAP.CERAMIC	-20+50%	10NF	4822 122 31414
C 2599	CAP.CERAMIC	-20+50%	10NF	4822 122 31414
C 2600	CAP.CERAMIC	-20+50%	10NF	4822 122 31414
C 2601	CAP.CERAMIC	-20+50%	10NF	4822 122 31414
C 2602	CAP.ELECTROLYT.	-10+50%	33UF	4822 124 20688
C 2604	CAP.CERAMIC	-20+50%	10NF	4822 122 31414
C 2605	CAP.CERAMIC	-20+50%	10NF	4822 122 31414
C 2606	CAP.CERAMIC	-20+50%	10NF	4822 122 31414
C 2701	CAP.CERAMIC	-20+50%	10NF	4822 122 31414
C 2702	CAP.CERAMIC	-20+50%	10NF	4822 122 31414
C 2703	CAP.ELECTROLYT.	-10+50%	47UF	4822 124 20678
C 2704	CAP.CERAMIC	2%	82PF	4822 122 31237
C 2705	CAP.CERAMIC	-20+50%	10NF	4822 122 31414
C 2706	CAP.CERAMIC	0.25PF	8.2PF	4822 122 31194
C 2707	CAP.CERAMIC	0.25PF	6.8PF	4822 122 31192
C 2708	CAP.CERAMIC	2%	100PF	5322 122 31626
C 2709	CAP.ELECTROLYT.	-10+50%	4.7UF	4822 124 20726
C 2710	CAP.ELECTROLYT.	-10+50%	33UF	4822 124 20688
C 2711	CAP.FOIL	100V 10%	220NF	4822 121 40232
C 2712	CAP.ELECTROLYT.	-10+50%	33UF	4822 124 20688
C 2713	CAP.CERAMIC	-20+50%	10NF	4822 122 31414
C 2714	CAP.CERAMIC	10%	4.7NF	4822 122 31125
C 2715	CAP.CHIP	2%	15PF	4822 122 31823
C 2716	CAP.CERAMIC	10%	1NF	4822 122 30027
C 2717	CAP.CERAMIC	-20+50%	10NF	4822 122 31414
C 2718	CAP.CERAMIC	2%	68PF	4822 122 31349
C 2719	CAP.FOIL	400V 10%	22NF	5322 121 40308
C 2721	CAP.CERAMIC	2%	180PF	5322 122 34144
C 2722	CAP.ELECTROLYT.	-10+50%	47UF	4822 124 20678
C 2723	CAP.ELECTROLYT.	-10+50%	33UF	4822 124 20688
C 2724	CAP.CERAMIC	2%	12PF	4822 122 31196
C 2726	CAP.CERAMIC	-20+50%	10NF	4822 122 31414
C 2727	CAP.CERAMIC	10%	1NF	4822 122 30027
C 2728	CAP.CERAMIC	-20+50%	10NF	4822 122 31414
C 2729	CAP.CERAMIC	2%	270PF	4822 122 30107
C 2730	CAP.CERAMIC	2%	22PF	4822 122 31063
C 2731	CAP.CERAMIC	-20+50%	10NF	4822 122 31414
C 2732	CAP.CERAMIC	-20+50%	10NF	4822 122 31414
C 2733	CAP.ELECTROLYT.	-10+50%	47UF	4822 124 20678
C 2734	CAP.FOIL	100V 10%	220NF	4822 121 40232
C 2736	CAP.ELECTROLYT.	-10+50%	33UF	4822 124 20688
C 2737	CAP.FOIL	100V 10%	680NF	5322 121 40233
C 2738	CAP.CERAMIC	2%	100PF	4822 122 31316
C 2739	CAP.CERAMIC	-20+50%	10NF	4822 122 31414

POSNR	DESCRIPTION			ORDERING CODE
C 2741	CAP.ELECTROLYT.	-10+50%	33UF	4822 124 20688
C 2742	CAP.CERAMIC	-20+50%	10NF	4822 122 31414
C 2743	CAP.FOIL	100V 10%	680NF	5322 121 40233
C 2744	CAP.CERAMIC	-20+50%	10NF	4822 122 31414
C 2745	CAP.CERAMIC	0.25PF	2.2PF	4822 122 31036
C 2746	CAP.CERAMIC	2%	100PF	4822 122 31316
C 2747	CAP.CERAMIC	-20+50%	10NF	4822 122 31414
C 2748	CAP.CERAMIC	-20+50%	10NF	4822 122 31414
C 2749	CAP.CERAMIC	-20+50%	10NF	4822 122 31414
C 2750	CAP.CERAMIC	-20+50%	10NF	4822 122 31414
C 2751	CAP.CERAMIC	-20+50%	10NF	4822 122 31414
C 2752	CAP.CERAMIC	-20+50%	10NF	4822 122 31414
C 2753	CAP.CERAMIC	-20+50%	10NF	4822 122 31414
C 2754	CAP.CERAMIC	-20+50%	10NF	4822 122 31414
C 2756	CAP.CERAMIC	-20+50%	10NF	4822 122 31414
C 2757	CAP.CERAMIC	-20+50%	10NF	4822 122 31414
C 2901	CAP.ELECTROLYT.	-10+50%	68UF	4822 124 20689
C 2902	CAP.ELECTROLYT.	-10+50%	47UF	4822 124 20678
C 2903	CAP.ELECTROLYT.	-10+50%	47UF	4822 124 20678
C 2904	CAP.ELECTROLYT.	-10+50%	10UF	4822 124 20728
C 2905	CAP.CERAMIC	-20+50%	10NF	4822 122 31414
C 2906	CAP.ELECTROLYT.	-10+50%	47UF	4822 124 20678
C 2907	CAP.ELECTROLYT.	-10+50%	47UF	4822 124 20678
C 2908	CAP.ELECTROLYT.	-10+50%	33UF	4822 124 20688
C 2909	CAP.ELECTROLYT.	-10+50%	33UF	4822 124 20688
C 2911	CAP.CERAMIC	-20+50%	10NF	4822 122 31414
C 2912	CAP.CERAMIC	-20+50%	10NF	4822 122 31414
C 2913	CAP.CERAMIC	2%	12PF	4822 122 31056
C 2914	CAP.CERAMIC	2%	100PF	4822 122 31316
C 2916	CAP.CERAMIC	2%	12PF	4822 122 31056
C 2917	CAP.CERAMIC	10%	1NF	4822 122 30027
C 2918	CAP.CERAMIC	2%	220PF	4822 122 31222
C 2919	CAP.CERAMIC	10%	4.7NF	4822 122 31125
C 2920	CAP.CERAMIC	-20+50%	10NF	4822 122 31414
C 2921	CAP.CERAMIC	0.25PF	5.6PF	5322 122 32163
C 2922	CAP.CERAMIC	-20+50%	10NF	4822 122 31414
C 2923	CAP.FOIL	630V 1%	392PF	5322 121 54228
C 2924	CAP.CERAMIC	10%	1NF	4822 122 30027
C 2925	CAP.CERAMIC	10%	4.7NF	4822 122 31125
C 2926	CAP.CERAMIC	-20+50%	10NF	4822 122 31414
C 2927	CAP.CERAMIC	2%	100PF	4822 122 31316
C 2928	CAP.CERAMIC	-20+50%	10NF	4822 122 31414
C 2929	CAP.CERAMIC	-20+50%	10NF	4822 122 31414
C 2930	CAP.CERAMIC	10%	1NF	4822 122 30027
C 2931	CAP.CERAMIC	-20+50%	10NF	4822 122 31414
C 2932	CAP.CERAMIC	0.25PF	1PF	4822 122 30104
C 2933	CAP.CERAMIC	0.25PF	1PF	4822 122 30104
C 2934	CAP.CERAMIC	-20+50%	10NF	4822 122 31414
C 2935	CAP.SOLID ALU.	10V 20%	33UF	4822 124 20945
C 2936	CAP.CERAMIC	-20+50%	10NF	4822 122 31414
C 2937	CAP.CERAMIC	-20+50%	10NF	4822 122 31414
C 2938	CAP.CHIP	0.25PF	4.7PF	4822 122 31822
C 2939	CAP.CHIP	0.25PF	4.7PF	4822 122 31822
C 2940	CAP.CERAMIC	-20+50%	10NF	4822 122 31414
C 2941	CAP.CERAMIC	-20+50%	10NF	4822 122 31414
C 2942	CAP.CHIP	0.25PF	4.7PF	4822 122 31822
C 2943	CAP.CERAMIC	-20+50%	10NF	4822 122 31414
C 2944	CAP.CERAMIC	-20+50%	10NF	4822 122 31414
C 2945	CAP.CERAMIC	10%	180PF	4822 122 30113
C 2946	CAP.ELECTROLYT.	-10+50%	33UF	4822 124 20688

POSNR	DESCRIPTION		ORDERING CODE
C 2947	CAP.FOIL	100V 10% 100NF	5322 121 40323
C 2948	CAP.CERAMIC	2% 27PF	4822 122 30045
C 2950	CAP.CERAMIC	-20+50% 10NF	4822 122 31414
C 3000	CAP.CERAMIC	-20+50% 10NF	4822 122 31414
C 3001	CAP.CERAMIC	-20+50% 10NF	4822 122 31414
C 3002	CAP.CERAMIC	-20+50% 10NF	4822 122 31414
C 3003	CAP.CERAMIC	-20+50% 10NF	4822 122 31414
C 3004	CAP.CERAMIC	-20+50% 10NF	4822 122 31414
C 3005	CAP.CERAMIC	-20+50% 10NF	4822 122 31414
C 3006	CAP.CERAMIC	2% 22PF	4822 122 31063
C 3007	CAP.CERAMIC	0.25PF 3.9PF	5322 122 34107
C 3008	CAP.CERAMIC	0.25PF 3.9PF	5322 122 34107
C 3009	CAP.FOIL	100V 10% 470NF	5322 121 40175
C 3010	CAP.ELECTROLYT.	-10+50% 47UF	4822 124 20678
C 3011	CAP.CERAMIC	2% 47PF	4822 122 31072
C 3012	CAP.CERAMIC	-20+50% 10NF	4822 122 31414
C 3013	CAP.CERAMIC	-20+50% 10NF	4822 122 31414
C 3014	CAP.SOLID ALU.	16V 20% 15UF	4822 124 20977
C 3015	CAP.SOLID ALU.	16V 20% 3.3UF	4822 124 20947
C 3016	CAP.CHIP	2% 15PF	4822 122 31823
C 3017	CAP.TRIMMER	300V 2/18PF	5322 125 50051
C 3018	CAP.CERAMIC	-20+50% 10NF	4822 122 31414
C 3019	CAP.TRIMMER	300V 1.8/10PF	5322 125 50049
C 3020	CAP.SOLID ALU.	16V 20% 3.3UF	4822 124 20947
C 3021	CAP.SOLID ALU.	16V 20% 15UF	4822 124 20977
C 3022	CAP.TANTAL	16V 20% 6.8UF	5322 124 14069
C 3023	CAP.ELECTROLYT.	-10+50% 33UF	4822 124 20688
C 3024	CAP.CERAMIC	10% 4.7NF	4822 122 31125
C 3025	CAP.CERAMIC	2% 100PF	4822 122 31316
C 3026	CAP.CERAMIC	2% 15PF	4822 122 31058
C 3027	CAP.CERAMIC	-20+50% 10NF	4822 122 31414
C 3028	CAP.CERAMIC	2% 10PF	4822 122 32185
C 3029	CAP.CERAMIC	2% 10PF	4822 122 32185
C 3030	CAP.CERAMIC	-20+50% 10NF	4822 122 31414
C 3201	CAP.CHIP	2% 15PF	4822 122 31823
C 3202	CAP.CERAMIC	63V 10% 100NF	5322 122 32049
C 3203	CAP.CERAMIC	63V 10% 100NF	5322 122 32049
C 3204	CAP.CERAMIC	63V 10% 100NF	5322 122 32049
C 3205	CAP.CERAMIC	-20+50% 10NF	4822 122 31414
C 3206	CAP.CERAMIC	63V 10% 100NF	5322 122 32049
C 3207	CAP.CERAMIC	63V 10% 100NF	5322 122 32049
C 3208	CAP.FOIL	63V 1% 10NF	5322 121 54154
C 3209	CAP.FOIL	63V 1% 10NF	5322 121 54154
C 3210	CAP.FOIL	630V 1% 220PF	5322 121 54059
C 3211	CAP.CERAMIC	63V 10% 100NF	5322 122 32049
C 3212	CAP.CERAMIC	63V 10% 100NF	5322 122 32049
C 3213	CAP.CERAMIC	63V 10% 100NF	5322 122 32049
C 3214	CAP.CERAMIC	63V 10% 100NF	5322 122 32049
C 3215	CAP.CERAMIC	-20+50% 10NF	4822 122 31414
C 3216	CAP.CHIP	2% 15PF	4822 122 31823
C 3217	CAP.SOLID ALU.	25V 20% 6.8UF	5322 124 14081
C 3218	CAP.SOLID ALU.	25V 20% 6.8UF	5322 124 14081
C 3219	CAP.CHIP	2% 15PF	4822 122 31823
C 3220	CAP.CERAMIC	-20+50% 10NF	4822 122 31414
C 3221	CAP.CERAMIC	-20+50% 10NF	4822 122 31414
C 3222	CAP.FOIL	630V 1% 220PF	5322 121 54059
C 3223	CAP.CERAMIC	-20+50% 10NF	4822 122 31414
C 3224	CAP.CERAMIC	63V 10% 100NF	5322 122 32049
C 3225	CAP.CERAMIC	-20+50% 10NF	4822 122 31414
C 3226	CAP.CERAMIC	63V 10% 100NF	5322 122 32049
C 3227	CAP.CERAMIC	63V 10% 100NF	5322 122 32049
C 3228	CAP.CERAMIC	63V 10% 100NF	5322 122 32049
C 3229	CAP.SOLID ALU.	10V 20% 33UF	4822 124 20945
C 3230	CAP.CERAMIC	-20+50% 10NF	4822 122 31414
C 3231	CAP.SOLID ALU.	25V 20% 6.8UF	5322 124 14081

POSNR	DESCRIPTION			ORDERING CODE
C 3232	CAP.SOLID ALU.	25V 20%	6.8UF	5322 124 14081
C 3233	CAP.CERAMIC	-20+50%	10NF	4822 122 31414
C 3234	CAP.CERAMIC	-20+50%	10NF	4822 122 31414
C 3235	CAP.CERAMIC	-20+50%	10NF	4822 122 31414
C 3236	CAP.ELECTROLYT.	-10+50%	15UF	4822 124 20709
C 3237	CAP.ELECTROLYT.	-10+50%	100UF	4822 124 20715
C 3238	CAP.SOLID ALU.	25V 20%	6.8UF	5322 124 14081
C 3239	CAP.CERAMIC	-20+50%	10NF	4822 122 31414
C 3240	CAP.CERAMIC	-20+50%	10NF	4822 122 31414
C 3241	CAP.CERAMIC	2%	10PF	4822 122 32185
C 3401	CAP.CERAMIC	0.25PF	5.6PF	5322 122 32163
C 3402	CAP.CERAMIC	63V 10%	100NF	5322 122 32049
C 3403	CAP.CERAMIC	63V 10%	100NF	5322 122 32049
C 3404	CAP.SOLID ALU.	10V 20%	33UF	4822 124 20945
C 3406	CAP.CERAMIC	63V 10%	100NF	5322 122 32049
C 3407	CAP.CERAMIC	0.25PF	5.6PF	5322 122 32163
C 3408	CAP.CERAMIC	63V 10%	100NF	5322 122 32049
C 3409	CAP.CERAMIC	63V 10%	100NF	5322 122 32049
C 3411	CAP.CERAMIC	63V 10%	100NF	5322 122 32049
C 3412	CAP.CERAMIC	63V 10%	100NF	5322 122 32049
C 3413	CAP.CERAMIC	63V 10%	100NF	5322 122 32049
C 3414	CAP.CERAMIC	63V 10%	100NF	5322 122 32049
C 3416	CAP.SOLID ALU.	25V 20%	6.8UF	5322 124 14081
C 3417	CAP.CERAMIC	63V 10%	100NF	5322 122 32049
C 3418	CAP.CERAMIC	2%	100PF	4822 122 31316
C 3419	CAP.CERAMIC	-20+50%	10NF	4822 122 31414
C 3422	CAP.SOLID ALU.	25V 20%	6.8UF	5322 124 14081
C 3423	CAP.CERAMIC	63V 10%	100NF	5322 122 32049

Resistors

POSNR	DESCRIPTION				ORDERING CODE
R 0001	POTM.CARB.TRACK	0.1W	20%	47K	5322 101 24185
R 0002	POTM.+SWI.CARB.	0.1W	20%	10K	5322 101 44049
R 0003	POTM.CARB.TRACK	0.1W	20%	10K	5322 101 24184
R 0004	POTM.+SWI.CARB.	0.1W	20%	47K	5322 101 64031
R 0005	POTM.+SWI.CARB.	0.1W	20%	47K	5322 101 64031
R 0006	POTM.+SWI.CARB.	0.1W	20%	47K	5322 101 64031
R 0007	POTM.+SWI.CARB.	0.1W	20%	4K7	5322 101 40098
R 0008	POTM.+SWI.CARB.	0.1W	20%	4K7	5322 101 40098
R 0009	POTM.+SWI.CARB.	0.1W	20%	47K	5322 101 64032
R 0010	POTM.+SWI.TAND.	0.1W	20%	10K	5322 102 40059
R 0012	POTM.+SWI.TAND.	0.1W	20%	10K	5322 102 40058
R 0014	POTM.+SWI.CARB.		20%	100K	5322 101 44037
R 0015	POTM.CARB.TRACK	0.1W	20%	47K	5322 101 24203
R 0016	POTM.CARB.TRACK	0.1W	20%	4K7	5322 101 24186
R 0101	RES.METAL FILM	MR25	1%	499E	5322 116 54524
R 0201	RES.METAL FILM	MR25	1%	237E	5322 116 50679
R 0202	RES.METAL FILM	MR25	1%	237E	5322 116 50679
R 0203	RES.METAL FILM	MR25	1%	237E	5322 116 50679
R 0204	RES.METAL FILM	MR25	1%	237E	5322 116 50679
R 0206	RES.METAL FILM	MR25	1%	237E	5322 116 50679
R 0207	RES.METAL FILM	MR25	1%	237E	5322 116 50679
R 0208	RES.METAL FILM	MR25	1%	237E	5322 116 50679
R 0209	RES.METAL FILM	MR25	1%	237E	5322 116 50679
R 0211	RES.METAL FILM	MR25	1%	237E	5322 116 50679
R 0212	RES.METAL FILM	MR25	1%	237E	5322 116 50679
R 0213	RES.METAL FILM	MR25	1%	237E	5322 116 50679
R 0214	RES.METAL FILM	MR25	1%	1K15	5322 116 50415
R 0216	RES.METAL FILM	MR25	1%	1K15	5322 116 50415
R 0217	RES.METAL FILM	MR25	1%	1K15	5322 116 50415
R 0218	RES.METAL FILM	MR25	1%	1K15	5322 116 50415
R 0219	RES.METAL FILM	MR25	1%	1K15	5322 116 50415
R 0221	RES.METAL FILM	MR25	1%	1K15	5322 116 50415
R 0222	RES.METAL FILM	MR25	1%	237E	5322 116 50679
R 0223	RES.METAL FILM	MR25	1%	237E	5322 116 50679
R 0231	RES.METAL FILM	MR25	1%	20K5	5322 116 55419
R 0232	RES.METAL FILM	MR25	1%	20K5	5322 116 55419
R 0241	RES.METAL FILM	MR25	1%	6K81	4822 116 51252
R 0242	RES.METAL FILM	MR25	1%	6K81	4822 116 51252
R 0243	RES.METAL FILM	MR25	1%	6K81	4822 116 51252
R 0244	RES.METAL FILM	MR25	1%	6K81	4822 116 51252
R 0246	RES.METAL FILM	MR25	1%	6K81	4822 116 51252
R 0247	RES.METAL FILM	MR25	1%	6K81	4822 116 51252
R 0248	RES.METAL FILM	MR25	1%	6K81	4822 116 51252
R 0249	RES.METAL FILM	MR25	1%	6K81	4822 116 51252
R 0251	RES.METAL FILM	MR25	1%	6K81	4822 116 51252
R 0252	RES.METAL FILM	MR25	1%	6K81	4822 116 51252
R 0253	RES.METAL FILM	MR25	1%	6K81	4822 116 51252
R 0254	RES.METAL FILM	MR25	1%	6K81	4822 116 51252
R 0256	RES.METAL FILM	MR25	1%	6K81	4822 116 51252
R 0257	RES.METAL FILM	MR25	1%	6K81	4822 116 51252
R 0258	RES.METAL FILM	MR25	1%	6K81	4822 116 51252
R 0259	RES.METAL FILM	MR25	1%	6K81	4822 116 51252
R 0261	RES.METAL FILM	MR25	1%	6K81	4822 116 51252
R 0262	RES.METAL FILM	MR25	1%	6K81	4822 116 51252
R 0263	RES.METAL FILM	MR25	1%	6K81	4822 116 51252
R 0264	RES.METAL FILM	MR25	1%	6K81	4822 116 51252
R 0266	RES.METAL FILM	MR25	1%	6K81	4822 116 51252
R 0267	RES.METAL FILM	MR25	1%	6K81	4822 116 51252
R 0268	RES.METAL FILM	MR25	1%	6K81	4822 116 51252
R 0269	RES.METAL FILM	MR25	1%	6K81	4822 116 51252
R 0271	RES.METAL FILM	MR25	1%	2K26	5322 116 50675

POSNR	DESCRIPTION				ORDERING CODE
R 0272	RES.METAL FILM	MR25	1%	6K81	4822 116 51252
R 0273	RES.METAL FILM	MR25	1%	2K26	5322 116 50675
R 0274	RES.METAL FILM	MR25	1%	6K81	4822 116 51252
R 0276	RES.METAL FILM	MR25	1%	2K26	5322 116 50675
R 0277	RES.METAL FILM	MR25	1%	6K81	4822 116 51252
R 0278	RES.METAL FILM	MR25	1%	2K26	5322 116 50675
R 0279	RES.METAL FILM	MR25	1%	6K81	4822 116 51252
R 0281	RES.METAL FILM	MR25	1%	2K26	5322 116 50675
R 0282	RES.METAL FILM	MR25	1%	6K81	4822 116 51252
R 0283	RES.METAL FILM	MR25	1%	2K26	5322 116 50675
R 0284	RES.METAL FILM	MR25	1%	6K81	4822 116 51252
R 0286	RES.METAL FILM	MR25	1%	2K26	5322 116 50675
R 0287	RES.METAL FILM	MR25	1%	2K26	5322 116 50675
R 0291	RES.METAL FILM	MR25	1%	6K81	4822 116 51252
R 0292	RES.METAL FILM	MR25	1%	2K26	5322 116 50675
R 0293	RES.METAL FILM	MR25	1%	2K26	5322 116 50675
R 0294	RES.METAL FILM	MR25	1%	82K5	5322 116 55374
R 0296	RES.METAL FILM	MR25	1%	82K5	5322 116 55374
R 0401	RES.METAL FILM	MR25	1%	6K19	5322 116 55426
R 0402	RES.METAL FILM	MR25	1%	6K19	5322 116 55426
R 0403	RES.METAL FILM	MR25	1%	15K4	5322 116 55459
R 0404	RES.METAL FILM	MR25	1%	30K1	5322 116 54655
R 0406	RES.METAL FILM	MR25	1%	1K78	5322 116 50515
R 0407	RES.METAL FILM	MR25	1%	6K19	5322 116 55426
R 0408	RES.METAL FILM	MR25	1%	301K	5322 116 54743
R 0409	RES.METAL FILM	MR25	1%	6K19	5322 116 55426
R 0411	RES.METAL FILM	MR25	1%	6K19	5322 116 55426
R 0412	RES.METAL FILM	MR25	1%	6K19	5322 116 55426
R 0413	RES.METAL FILM	MR25	1%	301K	5322 116 54743
R 0414	RES.METAL FILM	MR25	1%	15K4	5322 116 55459
R 0416	RES.METAL FILM	MR25	1%	6K19	5322 116 55426
R 0417	RES.METAL FILM	MR25	1%	6K19	5322 116 55426
R 0418	RES.METAL FILM	MR25	1%	105K	5322 116 55356
R 0419	RES.METAL FILM	MR25	1%	6K19	5322 116 55426
R 0421	RES.METAL FILM	MR25	1%	301K	5322 116 54743
R 0422	RES.METAL FILM	MR25	1%	2K26	5322 116 50675
R 0423	RES.METAL FILM	MR25	1%	2K26	5322 116 50675
R 0601	RES.METAL FILM	MR25	1%	2K26	5322 116 50675
R 0602	RES.METAL FILM	MR25	1%	2K26	5322 116 50675
R 0603	RES.METAL FILM	MR25	1%	121E	5322 116 54426
R 0604	RES.METAL FILM	MR25	1%	121E	5322 116 54426
R 0606	RES.METAL FILM	MR25	1%	5E11	5322 116 54192
R 0607	RES.METAL FILM	MR25	1%	5E11	5322 116 54192
R 0608	RES.METAL FILM	MR25	1%	4K02	5322 116 55448
R 0609	RES.METAL FILM	MR25	1%	4K02	5322 116 55448
R 0701	RES.METAL FILM	MR25	1%	105E	5322 116 54472
R 0702	RES.METAL FILM	MR25	1%	4K02	5322 116 55448
R 0801	RES.WIREWOUND	-101-332		3K3	5322 111 94255
R 0901	RES.METAL FILM	MR25	1%	2K26	5322 116 50675
R 0902	RES.METAL FILM	MR25	1%	105E	5322 116 54472
R 0903	RES.METAL FILM	MR25	1%	2K26	5322 116 50675
R 0904	RES.METAL FILM	MR25	1%	2K26	5322 116 50675
R 0905	RES.METAL FILM	MR25	1%	4K02	5322 116 55448
R 0906	RES.METAL FILM	MR25	1%	2K26	5322 116 50675
R 0907	RES.METAL FILM	MR25	1%	2K26	5322 116 50675
R 0908	RES.METAL FILM	MR25	1%	2K26	5322 116 50675
R 0909	RES.METAL FILM	MR25	1%	2K26	5322 116 50675
R 0911	RES.METAL FILM	MR25	1%	2K26	5322 116 50675
R 0912	RES.METAL FILM	MR25	1%	2K26	5322 116 50675
R 1101	RES.METAL FILM	MR25	1%	23K7	5322 116 54646
R 1102	RES.METAL FILM	MR25	1%	28K7	5322 116 55462
R 1103	RES.METAL FILM	MR25	1%	5K62	4822 116 51281
R 1104	RES.METAL FILM	MR25	1%	3K16	5322 116 50579
R 1106	POTM.TRIMMER	MTP10	20%	22K	5322 101 14069
R 1107	POTM.TRIMMER	MTP10	20%	22K	5322 101 14069

POSNR	DESCRIPTION				ORDERING CODE
R 1108	POTM.TRIMMER	MTP10	20%	22K	5322 101 14069
R 1109	RES.METAL FILM	MR25	1%	1K	4822 116 51235
R 1111	RES.METAL FILM	MR25	1%	23K7	5322 116 54646
R 1112	RES.METAL FILM	MR25	1%	14K7	5322 116 54632
R 1113	RES.METAL FILM	MR25	1%	1K1	4822 116 51236
R 1114	RES.METAL FILM	MR25	1%	1K	4822 116 51235
R 1116	RES.METAL FILM	MR25	1%	825E	5322 116 54541
R 1117	RES.METAL FILM	MR25	1%	14K7	5322 116 54632
R 1118	RES.METAL FILM	MR25	1%	316E	5322 116 54511
R 1119	RES.METAL FILM	MR25	1%	1K1	4822 116 51236
R 1121	RES.METAL FILM	MR25	1%	4K64	5322 116 50484
R 1122	RES.METAL FILM	MR25	1%	10K	4822 116 51253
R 1123	RES.METAL FILM	MR25	1%	562E	4822 116 51231
R 1124	RES.METAL FILM	MR25	1%	2K15	5322 116 50767
R 1126	RES.METAL FILM	MR25	1%	100E	5322 116 55549
R 1127	RES.METAL FILM	MR25	1%	1K	4822 116 51235
R 1128	RES.METAL FILM	MR25	1%	42E2	5322 116 51052
R 1129	RES.METAL FILM	MR25	1%	1K	4822 116 51235
R 1131	RES.METAL FILM	MR25	1%	365E	5322 116 54516
R 1132	RES.METAL FILM	MR25	1%	2K15	5322 116 50767
R 1133	RES.METAL FILM	MR25	1%	42K2	5322 116 50474
R 1134	RES.METAL FILM	MR25	1%	17E8	5322 116 50418
R 1136	RES.N.T.C.	0.5W	10%	6K8	5322 116 34058
R 1137	RES.N.T.C.	0.5W	10%	6K8	5322 116 34058
R 1138	RES.METAL FILM	MR25	1%	42K2	5322 116 50474
R 1139	RES.METAL FILM	MR25	1%	2K15	5322 116 50767
R 1141	RES.METAL FILM	MR25	1%	10K	4822 116 51253
R 1142	RES.METAL FILM	MR25	1%	562E	4822 116 51231
R 1143	RES.METAL FILM	MR25	1%	2K15	5322 116 50767
R 1144	RES.METAL FILM	MR25	1%	365E	5322 116 54516
R 1146	RES.METAL FILM	MR25	1%	17E8	5322 116 50418
R 1147	RES.METAL FILM	MR25	1%	42E2	5322 116 51052
R 1148	RES.METAL FILM	MR25	1%	100E	5322 116 55549
R 1149	RES.METAL FILM	MR25	1%	511E	4822 116 51282
R 1151	RES.METAL FILM	MR25	1%	2K15	5322 116 50767
R 1152	RES.METAL FILM	MR25	1%	23K7	5322 116 54646
R 1153	RES.METAL FILM	MR25	1%	215E	5322 116 55274
R 1154	RES.METAL FILM	MR25	1%	1K1	4822 116 51236
R 1156	RES.METAL FILM	MR25	1%	825E	5322 116 54541
R 1157	RES.METAL FILM	MR25	1%	1K1	4822 116 51236
R 1201	RES.METAL FILM	MR25	1%	10K	4822 116 51253
R 1202	RES.METAL FILM	MR25	1%	100K	4822 116 51268
R 1203	RES.METAL FILM	MR25	1%	100K	4822 116 51268
R 1204	RES.METAL FILM	MR25	1%	100K	4822 116 51268
R 1206	RES.METAL FILM	MR25	1%	75K	4822 116 51267
R 1208	RES.METAL FILM	MR25	1%	133E	5322 116 54482
R 1209	RES.METAL FILM	MR25	1%	2K26	5322 116 50675
R 1210	RES.METAL FILM	MR25	1%	82E5	5322 116 55357
R 1211	RES.METAL FILM	MR25	1%	2K26	5322 116 50675
R 1213	RES.METAL FILM	MR25	1%	133E	5322 116 54482
R 1214	RES.METAL FILM	MR25	1%	2K26	5322 116 50675
R 1215	RES.METAL FILM	MR25	1%	316E	5322 116 54511
R 1216	RES.METAL FILM	MR25	1%	316E	5322 116 54511
R 1217	RES.METAL FILM	MR25	1%	316E	5322 116 54511
R 1218	RES.METAL FILM	MR25	1%	2K26	5322 116 50675
R 1219	RES.METAL FILM	MR25	1%	2K26	5322 116 50675
R 1220	RES.METAL FILM	MR25	1%	316E	5322 116 54511
R 1221	RES.METAL FILM	MR25	1%	2K26	5322 116 50675
R 1222	RES.METAL FILM	MR25	1%	2K26	5322 116 50675
R 1223	RES.METAL FILM	MR25	1%	2K26	5322 116 50675
R 1224	RES.METAL FILM	MR25	1%	2K26	5322 116 50675
R 1225	RES.METAL FILM	MR25	1%	4K87	5322 116 55445
R 1226	RES.METAL FILM	MR25	1%	2K26	5322 116 50675
R 1227	RES.METAL FILM	MR25	1%	2K26	5322 116 50675
R 1228	RES.METAL FILM	MR25	1%	2K26	5322 116 50675

POSNR	DESCRIPTION			ORDERING CODE
R 1229	RES.METAL FILM	MR25	1% 681E	4822 116 51233
R 1230	RES.METAL FILM	MR25	1% 3K01	4822 116 51246
R 1231	RES.METAL FILM	MR25	1% 178E	5322 116 54492
R 1232	RES.METAL FILM	MR25	1% 178E	5322 116 54492
R 1233	RES.METAL FILM	MR25	1% 133E	5322 116 54482
R 1234	RES.METAL FILM	MR25	1% 133E	5322 116 54482
R 1250	RES.METAL FILM	MR25	1% 82E5	5322 116 55357
R 1251	RES.METAL FILM	MR25	1% 82E5	5322 116 55357
R 1252	RES.METAL FILM	MR25	1% 82E5	5322 116 55357
R 1253	RES.METAL FILM	MR25	1% 51E1	5322 116 54442
R 1254	RES.METAL FILM	MR25	1% 23E7	5322 116 54014
R 1255	RES.METAL FILM	MR25	1% 51E1	5322 116 54442
R 1256	RES.METAL FILM	MR25	1% 133E	5322 116 54482
R 1257	RES.METAL FILM	MR25	1% 178E	5322 116 54492
R 1258	RES.METAL FILM	MR25	1% 178E	5322 116 54492
R 1259	RES.METAL FILM	MR25	1% 23E7	5322 116 54014
R 1260	RES.METAL FILM	MR25	1% 51E1	5322 116 54442
R 1301	RES.METAL FILM	MR25	1% 133E	5322 116 54482
R 1302	RES.METAL FILM	MR25	1% 82E5	5322 116 55357
R 1303	RES.METAL FILM	MR25	1% 205E	5322 116 55365
R 1304	RES.METAL FILM	MR25	1% 205E	5322 116 55365
R 1306	RES.METAL FILM	MR25	1% 205E	5322 116 55365
R 1307	RES.METAL FILM	MR25	1% 1K	4822 116 51235
R 1308	RES.METAL FILM	MR25	1% 1K	4822 116 51235
R 1309	RES.METAL FILM	MR25	1% 1K	4822 116 51235
R 1311	RES.METAL FILM	MR25	1% 5K11	5322 116 54595
R 1312	RES.METAL FILM	MR25	1% 2K26	5322 116 50675
R 1313	RES.METAL FILM	MR25	1% 2K26	5322 116 50675
R 1314	RES.METAL FILM	MR25	1% 2K26	5322 116 50675
R 1316	RES.METAL FILM	MR25	1% 2K26	5322 116 50675
R 1317	RES.METAL FILM	MR25	1% 2K26	5322 116 50675
R 1318	RES.METAL FILM	MR25	1% 2K26	5322 116 50675
R 1319	RES.METAL FILM	MR25	1% 2K26	5322 116 50675
R 1321	RES.METAL FILM	MR25	1% 2K26	5322 116 50675
R 1322	RES.METAL FILM	MR25	1% 1K	4822 116 51235
R 1323	RES.METAL FILM	MR25	1% 1K	4822 116 51235
R 1324	RES.METAL FILM	MR25	1% 2K26	5322 116 50675
R 1326	RES.METAL FILM	MR25	1% 2K26	5322 116 50675
R 1327	RES.METAL FILM	MR25	1% 10E	5322 116 50452
R 1328	RES.METAL FILM	MR25	1% 10E	5322 116 50452
R 1329	RES.METAL FILM	MR25	1% 10K	4822 116 51253
R 1331	RES.METAL FILM	MR25	1% 30K1	5322 116 54655
R 1332	RES.METAL FILM	MR25	1% 10K	4822 116 51253
R 1333	RES.METAL FILM	MR25	1% 4K02	5322 116 55448
R 1334	RES.METAL FILM	MR25	1% 2K74	5322 116 50636
R 1336	RES.METAL FILM	MR25	1% 681E	4822 116 51233
R 1337	RES.METAL FILM	MR25	1% 1K	4822 116 51235
R 1338	RES.METAL FILM	MR25	1% 4K02	5322 116 55448
R 1501	RES.METAL FILM	MR25	1% 31K6	5322 116 54657
R 1502	RES.HI-TENSION	VR37	5% 6M8	4822 110 42209
R 1503	RES.METAL FILM	MR25	1% 402E	5322 116 54519
R 1504	RES.HI-TENSION	VR37	1% 31M6	5322 116 64103
R 1506	POTM.TRIMMER	MTP10	20% 1M	5322 101 14068
R 1507	RES.P.T.C.		30-50E	4822 116 40031
R 1508	RES.METAL FILM	MR25	1% 10K	4822 116 51253
R 1509	RES.HI-TENSION	VR37	5% 2M2	4822 110 42196
R 1511	RES.METAL FILM	MR25	1% 4K64	5322 116 50484
R 1512	RES.METAL FILM	MR25	1% 11E	5322 116 54059
R 1513	RES.METAL FILM	MR25	1% 11E	5322 116 54059
R 1514	RES.METAL FILM	MR25	1% 10K	4822 116 51253
R 1516	RES.METAL FILM	MR25	1% 402K	5322 116 55283
R 1517	RES.METAL FILM	MR25	1% 1M	5322 116 55535
R 1518	RES.METAL FILM	MR25	1% 402K	5322 116 55283
R 1519	RES.METAL FILM	MR25	1% 1M	5322 116 55535
R 1521	RES.METAL FILM	MR25	1% 511E	4822 116 51282

POSNR	DESCRIPTION			ORDERING CODE
R 1522	RES.HI-TENSION	VR37	1% 10M	4822 116 60196
R 1523	RES.METAL FILM	MR25	1% 226E	5322 116 54497
R 1524	RES.METAL FILM	MR25	1% 226E	5322 116 54497
R 1526	RES.METAL FILM	MR25	1% 5K11	5322 116 54595
R 1527	RES.METAL FILM	MR25	1% 5E11	5322 116 54192
R 1528	RES.METAL FILM	MR25	1% 5E11	5322 116 54192
R 1529	RES.METAL FILM	MR25	1% 5E11	5322 116 54192
R 1531	RES.METAL FILM	MR25	1% 1M	5322 116 55535
R 1532	RES.METAL FILM	MR25	1% 1K33	5322 116 55422
R 1533	RES.METAL FILM	MR25	1% 1K33	5322 116 55422
R 1534	RES.METAL FILM	MR25	1% 1K	4822 116 51235
R 1536	RES.METAL FILM	MR25	1% 511K	5322 116 55258
R 1537	RES.METAL FILM	MR25	1% 68K1	4822 116 51266
R 1538	RES.METAL FILM	MR25	1% 68K1	4822 116 51266
R 1539	RES.METAL FILM	MR25	1% 22K6	5322 116 50481
R 1541	RES.METAL FILM	MR25	1% 681K	5322 116 55284
R 1542	RES.METAL FILM	MR25	1% 100E	5322 116 55549
R 1543	RES.METAL FILM	MR25	1% 100E	5322 116 55549
R 1544	RES.METAL FILM	MR25	1% 5K11	5322 116 54595
R 1546	RES.METAL FILM	MR25	1% 121E	5322 116 54426
R 1547	RES.METAL FILM	MR25	1% 82E5	5322 116 55357
R 1548	RES.METAL FILM	MR25	1% 825E	5322 116 54541
R 1549	RES.METAL FILM	MR25	1% 1K	4822 116 51235
R 1551	RES.METAL FILM	MR25	1% 249K	5322 116 54734
R 1552	RES.METAL FILM	MR25	1% 3K48	5322 116 55367
R 1553	RES.METAL FILM	MR25	1% 68K1	4822 116 51266
R 1554	RES.METAL FILM	MR25	1% 40K2	5322 116 54665
R 1556	RES.METAL FILM	MR25	1% 274E	5322 116 54504
R 1557	RES.METAL FILM	MR25	1% 21K5	5322 116 50451
R 1558	RES.METAL FILM	MR25	1% 15K4	5322 116 55459
R 1559	RES.METAL FILM	MR25	1% 1K33	5322 116 55422
R 1561	RES.METAL FILM	MR25	1% 825E	5322 116 54541
R 1562	RES.METAL FILM	MR25	1% 274E	5322 116 54504
R 1563	RES.METAL FILM	MR25	1% 36K5	5322 116 50726
R 1564	RES.METAL FILM	MR25	1% 6K81	4822 116 51252
R 1566	RES.METAL FILM	MR25	1% 22K6	5322 116 50481
R 1567	RES.METAL FILM	MR25	1% 22K6	5322 116 50481
R 1568	RES.METAL FILM	MR25	1% 3K01	4822 116 51246
R 1569	RES.METAL FILM	MR25	1% 30K1	5322 116 54655
R 1571	RES.METAL FILM	MR25	1% 26K1	5322 116 54651
R 1572	RES.METAL FILM	MR25	1% 6K81	4822 116 51252
R 1573	RES.METAL FILM	MR25	1% 11K	5322 116 54623
R 1574	RES.METAL FILM	MR25	1% 3K01	4822 116 51246
R 1576	RES.METAL FILM	MR25	1% 10K	4822 116 51253
R 1577	RES.METAL FILM	MR25	1% 8K25	5322 116 54558
R 1578	RES.SAFETY	MR25	1% 7K87	5322 116 50458
R 1579	RES.METAL FILM	MR25	1% 1M	5322 116 55535
R 1581	RES.METAL FILM	MR25	1% 10K	4822 116 51253
R 1582	RES.METAL FILM	MR25	1% 3K01	4822 116 51246
R 1583	RES.METAL FILM	MR25	1% 3K01	4822 116 51246
R 1584	RES.METAL FILM	MR25	1% 3K01	4822 116 51246
R 1586	RES.METAL FILM	MR25	1% 18K7	5322 116 55362
R 1587	POTM.TRIMMER	MTP10	20% 47K	5322 101 14293
R 1588	POTM.TRIMMER	MTP10	20% 2K2	5322 100 10117
R 1589	POTM.TRIMMER	MTP10	20% 2K2	5322 100 10117
R 1591	POTM.TRIMMER	MTP10	20% 1K	5322 101 10294
R 1592	RES.METAL FILM	MR25	1% 18K7	5322 116 55362
R 1601	RES.METAL FILM	MR25	1% 301K	5322 116 54743
R 1602	RES.METAL FILM	MR25	1% 301K	5322 116 54743
R 1603	RES.METAL FILM	PR52	5% 2K	5322 116 55205
R 1604	RES.METAL FILM	PR52	5% 20E	5322 116 54351
R 1605	RES.METAL FILM	MR25	1% 22E6	5322 116 50491
R 1606	RES.METAL FILM		0.1% 110K	5322 116 51696
R 1607	RES.METAL FILM	MR25	1% 20K5	5322 116 55419
R 1608	RES.METAL FILM	MR25	1% 100K	4822 116 51268

POSNR	DESCRIPTION				ORDERING CODE
R 1609	RES.METAL FILM	MR25	1%	40K2	5322 116 54665
R 1611	RES.METAL FILM	MR25	1%	22K6	5322 116 50481
R 1612	RES.METAL FILM	MR25	1%	33K2	4822 116 51259
R 1613	RES.HI-TENSION	VR37	5%	1M	5322 116 64006
R 1614	RES.METAL FILM		0.1%	215K	5322 116 51697
R 1616	RES.WIREWOUND	4W	5%	3K3	4822 112 21121
R 1617	RES.HI-TENSION	VR37	5%	1M	5322 116 64006
R 1618	RES.METAL FILM		0.1%	215K	5322 116 51697
R 1619	RES.METAL FILM	PR52	5%	27K	5322 116 54983
R 1620	RES.METAL FILM	MR25	1%	1K54	5322 116 50586
R 1621	RES.METAL FILM	PR52	5%	27K	5322 116 54983
R 1622	RES.METAL FILM		0.1%	110K	5322 116 51696
R 1623	RES.METAL FILM	MR25	1%	24K9	5322 116 54648
R 1624	RES.METAL FILM	MR25	1%	6K81	4822 116 51252
R 1626	RES.METAL FILM	MR25	1%	249E	5322 116 54499
R 1627	RES.METAL FILM	MR25	1%	1E	4822 116 51179
R 1628	RES.METAL FILM	MR25	1%	100E	5322 116 55549
R 1629	RES.METAL FILM	MR25	1%	10E	5322 116 50452
R 1631	RES.N.T.C.		25% 245V	1500E	5322 116 34051
R 1632	RES.METAL FILM	MR25	1%	12K1	5322 116 50572
R 1633	RES.METAL FILM	MR25	1%	825E	5322 116 54541
R 1634	RES.METAL FILM	MR25	1%	140E	5322 116 55568
R 1636	RES.METAL FILM	MR25	1%	61E9	5322 116 54451
R 1637	RES.METAL FILM	MR25	1%	3K32	4822 116 51247
R 1638	RES.METAL FILM	MR25	1%	2K26	5322 116 50675
R 1639	RES.METAL FILM	MR25	1%	4K87	5322 116 55445
R 1641	RES.METAL FILM	MR25	1%	4K64	5322 116 50484
R 1642	RES.METAL FILM	MR25	1%	16K2	5322 116 55361
R 1643	RES.METAL FILM	MR25	1%	100K	4822 116 51268
R 1644	RES.METAL FILM	MR25	1%	5E11	5322 116 54192
R 1646	POTM.TRIMMER	MTP10	20%	470E	5322 101 14049
R 1647	POTM.TRIMMER	MTP10	20%	4K7	5322 101 14067
R 1648	RES.METAL FILM	MR25	1%	4K42	5322 116 50556
R 2001	RES.METAL FILM	MR25	1%	681K	5322 116 55284
R 2002	RES.METAL FILM	MR25	1%	681K	5322 116 55284
R 2003	RES.METAL FILM	MR25	1%	681K	5322 116 55284
R 2004	RES.METAL FILM	MR25	1%	681K	5322 116 55284
R 2006	RES.METAL FILM	MR25	1%	681K	5322 116 55284
R 2007	RES.METAL FILM	MR25	1%	681K	5322 116 55284
R 2008	POTM.TRIMMER	MTP10	20%	2K2	5322 100 10117
R 2009	POTM.TRIMMER	MTP10	20%	4K7	5322 101 14067
R 2011	POTM.TRIMMER	MTP10	20%	47K	5322 101 14293
R 2012	RES.METAL FILM	MR25	1%	3K16	5322 116 50579
R 2013	RES.METAL FILM	MR25	1%	16K9	5322 116 54635
R 2014	RES.METAL FILM	MR25	1%	10K	4822 116 51253
R 2016	RES.METAL FILM	MR25	1%	511E	4822 116 51282
R 2017	POTM.TRIMMER	MTP10	20%	1K	5322 101 10294
R 2018	POTM.TRIMMER	MTP10	20%	4K7	5322 101 14067
R 2019	POTM.TRIMMER	MTP10	20%	22K	5322 100 10118
R 2021	RES.METAL FILM	MR25	1%	20K5	5322 116 55419
R 2022	RES.METAL FILM	MR25	1%	10K	4822 116 51253
R 2023	RES.METAL FILM	MR25	1%	19K6	5322 116 54641
R 2024	RES.METAL FILM	MR25	1%	10K	4822 116 51253
R 2026	RES.METAL FILM	MR25	1%	3K32	4822 116 51247
R 2027	RES.METAL FILM	MR25	1%	178E	5322 116 54492
R 2028	RES.METAL FILM	MR25	1%	10K	4822 116 51253
R 2029	RES.METAL FILM	MR25	1%	10K	4822 116 51253
R 2031	RES.METAL FILM	MR25	1%	23K7	5322 116 54646
R 2032	RES.METAL FILM	MR25	1%	10K	4822 116 51253
R 2033	RES.METAL FILM	MR25	1%	10K	4822 116 51253
R 2034	RES.METAL FILM	MR25	1%	10K	4822 116 51253
R 2036	RES.METAL FILM	MR25	1%	100K	4822 116 51268
R 2037	RES.METAL FILM	MR25	1%	5K36	5322 116 54597
R 2038	RES.METAL FILM	MR25	1%	1K	4822 116 51235
R 2039	POTM.TRIMMER	MTP10	20%	4K7	5322 101 14067

POSNR	DESCRIPTION			ORDERING CODE
R 2041	RES.METAL FILM	MR25	1% 5K36	5322 116 54597
R 2042	RES.METAL FILM	MR25	1% 10K	4822 116 51253
R 2043	RES.METAL FILM	MR25	1% 1K87	5322 116 52123
R 2044	RES.METAL FILM	MR25	1% 22K6	5322 116 50481
R 2046	RES.METAL FILM	MR25	1% 2K05	5322 116 50664
R 2047	RES.METAL FILM	MR25	1% 100E	5322 116 55549
R 2048	RES.METAL FILM	MR25	1% 24K9	5322 116 54648
R 2049	RES.METAL FILM	MR25	1% 154K	5322 116 54714
R 2051	RES.METAL FILM	MR25	1% 154K	5322 116 54714
R 2052	RES.METAL FILM	MR25	1% 1K	4822 116 51235
R 2053	RES.METAL FILM	MR25	1% 10K	4822 116 51253
R 2054	RES.METAL FILM	MR25	1% 10K	4822 116 51253
R 2056	RES.METAL FILM	MR25	1% 10K	4822 116 51253
R 2057	RES.METAL FILM	MR25	1% 51K1	5322 116 50672
R 2058	RES.METAL FILM	MR25	1% 51K1	5322 116 50672
R 2059	RES.METAL FILM	MR25	1% 10K	4822 116 51253
R 2061	RES.METAL FILM	MR25	1% 10K	4822 116 51253
R 2062	RES.METAL FILM	MR25	1% 10K	4822 116 51253
R 2063	RES.METAL FILM	MR25	1% 154K	5322 116 54714
R 2064	RES.METAL FILM	MR25	1% 511K	5322 116 55258
R 2066	RES.METAL FILM	MR25	1% 7K15	5322 116 54606
R 2067	RES.METAL FILM	MR25	1% 7K15	5322 116 54606
R 2068	RES.METAL FILM	MR25	1% 100K	4822 116 51268
R 2069	RES.METAL FILM	MR25	1% 3K83	5322 116 54589
R 2071	RES.METAL FILM	MR25	1% 169K	5322 116 54718
R 2072	POTM.TRIMMER	MTP10	20% 100K	5322 100 10116
R 2073	RES.METAL FILM	MR25	1% 10K	4822 116 51253
R 2074	RES.METAL FILM	MR25	1% 7K15	5322 116 54606
R 2076	RES.METAL FILM	MR25	1% 3K83	5322 116 54589
R 2077	RES.METAL FILM	MR25	1% 10K	4822 116 51253
R 2078	RES.METAL FILM	MR25	1% 7K15	5322 116 54606
R 2079	RES.METAL FILM	MR25	1% 1K96	5322 116 54571
R 2080	RES.METAL FILM	MR25	1% 3K83	5322 116 54589
R 2081	RES.METAL FILM	MR25	1% 1K96	5322 116 54571
R 2082	RES.METAL FILM	MR25	1% 6K19	5322 116 55426
R 2083	RES.METAL FILM	MR25	1% 301K	5322 116 54743
R 2084	RES.METAL FILM	MR25	1% 24K9	5322 116 54648
R 2085	RES.METAL FILM	MR25	1% 3K83	5322 116 54589
R 2086	RES.METAL FILM	MR25	1% 100K	4822 116 51268
R 2087	RES.METAL FILM	MR25	1% 5K36	5322 116 54597
R 2088	RES.METAL FILM	MR25	1% 154K	5322 116 54714
R 2089	RES.METAL FILM	MR25	1% 10K	4822 116 51253
R 2091	RES.METAL FILM	MR25	1% 5K36	5322 116 54597
R 2092	RES.METAL FILM	MR25	1% 154K	5322 116 54714
R 2093	RES.METAL FILM	MR25	1% 1K78	5322 116 50515
R 2094	RES.METAL FILM	MR25	1% 3K01	4822 116 51246
R 2096	RES.METAL FILM	MR25	1% 10K	4822 116 51253
R 2097	RES.METAL FILM	MR25	1% 154K	5322 116 54714
R 2098	RES.METAL FILM	MR25	1% 2K37	5322 116 54576
R 2099	RES.METAL FILM	MR25	1% 15K4	5322 116 55459
R 2101	RES.METAL FILM	MR25	1% 30K1	5322 116 54655
R 2102	RES.METAL FILM	MR25	1% 953E	5322 116 54547
R 2103	RES.METAL FILM	MR25	1% 2K37	5322 116 54576
R 2104	RES.METAL FILM	MR25	1% 5E11	5322 116 54192
R 2106	RES.METAL FILM	MR25	1% 5E11	5322 116 54192
R 2107	RES.METAL FILM	MR25	1% 16K2	5322 116 55361
R 2108	RES.METAL FILM	MR25	1% 5E11	5322 116 54192
R 2109	RES.METAL FILM	MR25	1% 487E	5322 116 55451
R 2111	RES.METAL FILM	MR25	1% 2K74	5322 116 50636
R 2112	RES.METAL FILM	MR25	1% 10K5	5322 116 50731
R 2113	RES.METAL FILM	MR25	1% 5E11	5322 116 54192
R 2114	RES.METAL FILM	MR25	1% 5E11	5322 116 54192
R 2116	RES.METAL FILM	MR25	1% 5K11	5322 116 54595
R 2117	RES.METAL FILM	MR25	1% 5E11	5322 116 54192
R 2118	RES.METAL FILM	MR25	1% 75K	4822 116 51267

POSNR	DESCRIPTION				ORDERING CODE
R 2119	RES.METAL FILM	MR25	1%	5E11	5322 116 54192
R 2121	RES.METAL FILM	MR25	1%	10K	4822 116 51253
R 2122	RES.METAL FILM	MR25	1%	3K01	4822 116 51246
R 2123	RES.METAL FILM	MR25	1%	20K5	5322 116 55419
R 2124	RES.METAL FILM	MR25	1%	10K	4822 116 51253
R 2126	RES.METAL FILM	MR25	1%	5E11	5322 116 54192
R 2400	RES.HI-TENSION	VR25	5%	5M6	4822 110 72207
R 2401	RES.METAL FILM	MR25	1%	100K	4822 116 51268
R 2402	RES.METAL FILM	MR25	1%	100K	4822 116 51268
R 2403	RES.METAL FILM	MR25	1%	100K	4822 116 51268
R 2404	RES.METAL FILM	MR25	1%	100K	4822 116 51268
R 2405	RES.METAL FILM	MR25	1%	8E25	5322 116 54099
R 2406	RES.METAL FILM	MR25	1%	33K2	4822 116 51259
R 2407	RES.METAL FILM	MR25	1%	10K5	5322 116 50731
R 2408	RES.METAL FILM	MR25	1%	7K5	5322 116 54608
R 2409	RES.METAL FILM	MR25	1%	2K15	5322 116 50767
R 2410	RES.HI-TENSION	VR25	5%	1M5	4822 110 72192
R 2411	POTM.TRIMMER	MTP10	20%	2K2	5322 101 14008
R 2412	RES.METAL FILM	MR25	1%	2K05	5322 116 50664
R 2413	RES.METAL FILM	SPEC	0.5%	992K	5322 116 55153
R 2414	RES.METAL FILM	MR25	1%	147E	5322 116 50766
R 2415	RES.HI-TENSION	VR25	5%	3M3	4822 110 72201
R 2416	POTM.TRIMMER	MTP10	20%	22K	5322 101 14069
R 2417	RES.METAL FILM	MR25	1%	2K87	5322 116 55279
R 2418	RES.METAL FILM	MR25	1%	100E	5322 116 55549
R 2419	RES.METAL FILM	MR25	1%	1K	4822 116 51235
R 2420	RES.METAL FILM	MR25	1%	14E	5322 116 50839
R 2421	RES.METAL FILM	MR25	1%	64K9	5322 116 50514
R 2422	RES.CARBON	CR16	5%	560E	4822 111 30309
R 2423	RES.CARBON	CR16	5%	10E	4822 111 30347
R 2424	RES.METAL FILM	MR25	1%	1K	4822 116 51235
R 2425	RES.METAL FILM	MR25	1%	1K54	5322 116 50586
R 2426	RES.CARBON	0,125W	5%	100M	5322 111 30376
R 2428	RES.METAL FILM	MR25	1%	287E	5322 116 54506
R 2429	RES.METAL FILM	MR25	1%	287E	5322 116 54506
R 2431	RES.METAL FILM	MR25	1%	5K36	5322 116 54597
R 2432	RES.METAL FILM	MR25	1%	71K5	5322 116 54685
R 2433	RES.METAL FILM	MR25	1%	20K5	5322 116 55419
R 2434	RES.METAL FILM	MR25	1%	64K9	5322 116 50514
R 2435	RES.METAL FILM	MR25	1%	348E	5322 116 54515
R 2436	RES.CARBON	CR16	5%	33E	4822 111 30745
R 2437	RES.METAL FILM	MR25	1%	56E2	5322 116 54446
R 2438	RES.METAL FILM	MR25	1%	115E	5322 116 54476
R 2439	RES.METAL FILM	MR25	1%	124E	5322 116 54478
R 2441	RES.METAL FILM	MR25	1%	261E	5322 116 54502
R 2442	RES.METAL FILM	MR25	1%	10K	4822 116 51253
R 2443	RES.METAL FILM	MR25	1%	7K15	5322 116 54606
R 2444	RES.METAL FILM	MR25	1%	5E11	5322 116 54192
R 2445	RES.METAL FILM	MR25	1%	301K	5322 116 54743
R 2446	RES.METAL FILM	MR25	1%	21K5	5322 116 50451
R 2447	RES.METAL FILM	MR25	1%	100E	5322 116 55549
R 2448	RES.METAL FILM	MR25	0.5%	8K06	5322 116 55428
R 2449	RES.METAL FILM	MR25	1%	2K26	5322 116 50675
R 2450	RES.METAL FILM	MR25	1%	6E81	5322 116 54013
R 2451	RES.METAL FILM	MR25	1%	48K7	5322 116 50442
R 2452	RES.METAL FILM	MR25	1%	105E	5322 116 54472
R 2453	RES.METAL FILM	MR25	1%	95E3	5322 116 50569
R 2454	RES.METAL FILM	MR25	1%	1K58	5322 116 50622
R 2455	RES.METAL FILM	MR25	1%	51K1	5322 116 50672
R 2456	RES.METAL FILM	MR25	1%	95E3	5322 116 50569
R 2457	RES.METAL FILM	MR25	1%	5K9	5322 116 50583
R 2458	RES.METAL FILM	MR25	1%	3K32	4822 116 51247
R 2459	RES.CARBON	CR16	5%	22E	5322 111 30396
R 2461	RES.METAL FILM	MR25	1%	249K	5322 116 54734
R 2462	RES.METAL FILM	MR25	1%	22E6	5322 116 50491

POSNR	DESCRIPTION				ORDERING CODE
R 2463	RES.CARBON	CR16	5%	27E	4822 111 30348
R 2464	RES.CARBON	CR16	5%	33E	4822 111 30745
R 2465	RES.METAL FILM	MR25	1%	1M	5322 116 55535
R 2466	RES.METAL FILM	MR25	0.5%	806K	5322 116 51369
R 2467	RES.METAL FILM	MR25	1%	226K	5322 116 54729
R 2468	RES.METAL FILM	MR25	1%	82E5	5322 116 55357
R 2469	RES.METAL FILM	MR25	1%	18E7	5322 116 50895
R 2470	RES.METAL FILM	MR25	1%	1K	4822 116 51235
R 2471	RES.CARBON	CR16	5%	560E	4822 111 30309
R 2472	RES.CARBON	CR16	5%	39E	4822 111 30069
R 2473	RES.METAL FILM	MR30	0.5%	200K	5322 116 51371
R 2474	RES.METAL FILM	MR25	1%	51E1	5322 116 54442
R 2475	RES.METAL FILM	MR25	1%	1K	4822 116 51235
R 2476	RES.METAL FILM	MR25	1%	42E2	5322 116 51052
R 2477	RES.METAL FILM	MR25	1%	100K	4822 116 51268
R 2478	RES.METAL FILM	MR25	1%	42E2	5322 116 51052
R 2479	RES.METAL FILM	MR30	0.5%	920K	5322 116 55218
R 2481	POTM.TRIMMER	MTP10	20%	22K	5322 101 14069
R 2482	RES.METAL FILM	MR25	1%	86E6	5322 116 54464
R 2483	RES.METAL FILM	MR25	1%	5E11	5322 116 54192
R 2484	RES.METAL FILM	MR25	1%	18E7	5322 116 50895
R 2486	RES.METAL FILM	MR25	1%	402K	5322 116 55283
R 2487	RES.METAL FILM	MR25	1%	86E6	5322 116 54464
R 2488	RES.METAL FILM	MR25	1%	5E11	5322 116 54192
R 2489	RES.METAL FILM	MR25	1%	301E	5322 116 55366
R 2491	RES.METAL FILM	MR25	1%	301E	5322 116 55366
R 2493	RES.METAL FILM	MR25	0.5%	806K	5322 116 51369
R 2494	RES.METAL FILM	MR25	1%	53K6	5322 116 54674
R 2496	RES.METAL FILM	MR25	1%	205E	5322 116 55365
R 2497	RES.METAL FILM	MR25	1%	5K36	5322 116 54597
R 2498	RES.METAL FILM	MR25	1%	11K	5322 116 54623
R 2499	RES.METAL FILM	MR25	1%	133E	5322 116 54482
R 2501	RES.METAL FILM	MR25	1%	402E	5322 116 54519
R 2504	RES.METAL FILM	MR25	1%	100E	5322 116 55549
R 2506	RES.METAL FILM	MR25	1%	100E	5322 116 55549
R 2507	RES.METAL FILM	MR25	1%	5K36	5322 116 54597
R 2509	RES.METAL FILM	MR25	1%	715E	5322 116 50571
R 2511	RES.METAL FILM	MR25	1%	100K	4822 116 51268
R 2512	RES.METAL FILM	MR25	1%	590E	5322 116 50561
R 2513	RES.METAL FILM	MR25	1%	8K25	5322 116 54558
R 2514	RES.METAL FILM	MR25	1%	14K7	5322 116 54632
R 2515	RES.METAL FILM	MR25	1%	51E1	5322 116 54442
R 2516	RES.METAL FILM	MR25	1%	51E1	5322 116 54442
R 2517	RES.METAL FILM	MR25	1%	100E	5322 116 55549
R 2518	RES.METAL FILM	MR25	1%	1K	4822 116 51235
R 2519	RES.METAL FILM	MR25	1%	681E	4822 116 51233
R 2520	RES.METAL FILM	MR25	1%	100E	5322 116 55549
R 2520	RES.METAL FILM	MR25	1%	14E	5322 116 50839
R 2521	RES.METAL FILM	MR25	0.5%	88K7	5322 116 55452
R 2522	RES.METAL FILM	MR25	1%	7K15	5322 116 54606
R 2523	RES.METAL FILM	MR25	1%	100K	4822 116 51268
R 2524	RES.METAL FILM	MR25	1%	10E	5322 116 50452
R 2526	POTM.TRIMMER	MTP10	20%	1K	5322 100 10112
R 2527	POTM.TRIMMER	MTP10	20%	1K	5322 100 10112
R 2528	RES.METAL FILM	MR25	1%	1K05	5322 116 54552
R 2529	RES.METAL FILM	MR25	1%	51E1	5322 116 54442
R 2530	RES.METAL FILM	MR25	1%	100E	5322 116 55549
R 2531	RES.METAL FILM	MR25	1%	15K4	5322 116 55459
R 2532	RES.METAL FILM	MR25	1%	1K69	5322 116 54567
R 2533	RES.METAL FILM	MR25	1%	1K05	5322 116 54552
R 2534	POTM.TRIMMER	MTP10	20%	10K	5322 100 10113
R 2535	RES.METAL FILM	MR25	1%	100E	5322 116 55549
R 2536	POTM.TRIMMER	MTP10	20%	1K	5322 100 10112
R 2539	RES.METAL FILM	MR25	1%	301E	5322 116 55366
R 2540	RES.METAL FILM	MR25	1%	100E	5322 116 55549

POSNR	DESCRIPTION				ORDERING CODE
R 2541	RES.METAL FILM	MR25	1%	5K9	5322 116 50583
R 2542	RES.METAL FILM	MR25	1%	1K4	5322 116 54562
R 2543	RES.METAL FILM	MR25	1%	301E	5322 116 55366
R 2545	RES.METAL FILM	MR25	1%	150E	5322 116 54486
R 2546	RES.METAL FILM	SPEC	0.5%	992K	5322 116 55153
R 2547	RES.METAL FILM	MR25	1%	10E	5322 116 50452
R 2548	RES.METAL FILM	MR25	1%	147E	5322 116 50766
R 2549	RES.METAL FILM	MR25	1%	2K87	5322 116 55279
R 2551	RES.METAL FILM	MR25	1%	287E	5322 116 54506
R 2552	RES.METAL FILM	MR25	1%	287E	5322 116 54506
R 2553	RES.METAL FILM	MR25	1%	5K36	5322 116 54597
R 2554	RES.METAL FILM	MR25	1%	71K5	5322 116 54685
R 2556	RES.METAL FILM	MR25	1%	20K5	5322 116 55419
R 2557	RES.METAL FILM	MR25	1%	51E1	5322 116 54442
R 2558	RES.METAL FILM	MR25	1%	1K	4822 116 51235
R 2559	RES.CARBON	CR16	5%	10E	4822 111 30347
R 2560	RES.METAL FILM	MR25	1%	1K54	5322 116 50586
R 2561	RES.METAL FILM	MR25	1%	1K	4822 116 51235
R 2562	RES.CARBON	0,125W	5%	100M	5322 111 30376
R 2564	RES.METAL FILM	MR25	1%	5E11	5322 116 54192
R 2565	RES.METAL FILM	MR25	1%	51E1	5322 116 54442
R 2566	RES.METAL FILM	MR25	1%	2K37	5322 116 54576
R 2568	RES.CARBON	CR16	5%	33E	4822 111 30745
R 2569	RES.METAL FILM	MR25	1%	56E2	5322 116 54446
R 2570	RES.METAL FILM	MR25	1%	348E	5322 116 54515
R 2571	RES.METAL FILM	MR25	1%	115E	5322 116 54476
R 2572	RES.METAL FILM	MR25	1%	124E	5322 116 54478
R 2573	RES.METAL FILM	MR25	1%	261E	5322 116 54502
R 2574	RES.METAL FILM	MR25	1%	9K09	4822 116 51284
R 2575	RES.METAL FILM	MR25	1%	100E	5322 116 55549
R 2576	POTM.TRIMMER	MTP10	20%	22K	5322 101 14069
R 2577	RES.METAL FILM	MR25	1%	100E	5322 116 55549
R 2578	RES.METAL FILM	MR25	0.5%	8K06	5322 116 55428
R 2579	RES.METAL FILM	MR25	1%	2K26	5322 116 50675
R 2580	RES.METAL FILM	MR25	1%	6E81	5322 116 54013
R 2581	RES.METAL FILM	MR25	1%	48K7	5322 116 50442
R 2582	RES.METAL FILM	MR25	1%	105E	5322 116 54472
R 2583	RES.METAL FILM	MR25	1%	90E9	5322 116 54466
R 2584	RES.METAL FILM	MR25	1%	5K9	5322 116 50583
R 2585	RES.METAL FILM	MR25	1%	51K1	5322 116 50672
R 2586	RES.CARBON	CR16	5%	22E	5322 111 30396
R 2587	RES.METAL FILM	MR25	1%	249K	5322 116 54734
R 2588	RES.METAL FILM	MR25	1%	90E9	5322 116 54466
R 2589	RES.METAL FILM	MR25	1%	22E6	5322 116 50491
R 2591	RES.CARBON	CR16	5%	27E	4822 111 30348
R 2592	RES.CARBON	CR16	5%	33E	4822 111 30745
R 2593	RES.METAL FILM	MR25	0.5%	806K	5322 116 51369
R 2594	RES.METAL FILM	MR25	1%	226K	5322 116 54729
R 2595	RES.METAL FILM	MR25	1%	1M	5322 116 55535
R 2596	RES.METAL FILM	MR25	1%	82E5	5322 116 55357
R 2597	RES.METAL FILM	MR25	1%	18E7	5322 116 50895
R 2598	RES.CARBON	CR16	5%	560E	4822 111 30309
R 2599	RES.CARBON	CR16	5%	39E	4822 111 30069
R 2600	RES.METAL FILM	MR25	1%	1K	4822 116 51235
R 2601	RES.METAL FILM	MR30	0.5%	200K	5322 116 51371
R 2602	RES.METAL FILM	MR25	1%	51E1	5322 116 54442
R 2603	RES.METAL FILM	MR25	1%	301E	5322 116 55366
R 2604	RES.METAL FILM	MR25	1%	42E2	5322 116 51052
R 2605	RES.METAL FILM	MR25	1%	1K	4822 116 51235
R 2606	RES.METAL FILM	MR25	1%	100K	4822 116 51268
R 2607	RES.METAL FILM	MR25	1%	301E	5322 116 55366
R 2608	RES.METAL FILM	MR25	1%	42E2	5322 116 51052
R 2609	RES.METAL FILM	MR30	0.5%	920K	5322 116 55218
R 2611	POTM.TRIMMER	MTP10	20%	22K	5322 101 14069
R 2612	RES.METAL FILM	MR25	1%	86E6	5322 116 54464

POSNR	DESCRIPTION				ORDERING CODE
R 2613	RES.METAL FILM	MR25	1%	5E11	5322 116 54192
R 2614	RES.METAL FILM	MR25	1%	18E7	5322 116 50895
R 2616	RES.METAL FILM	MR25	1%	402K	5322 116 55283
R 2617	RES.METAL FILM	MR25	1%	86E6	5322 116 54464
R 2618	RES.METAL FILM	MR25	1%	5E11	5322 116 54192
R 2619	RES.METAL FILM	MR25	0.5%	806K	5322 116 51369
R 2621	RES.METAL FILM	MR25	1%	53K6	5322 116 54674
R 2622	RES.METAL FILM	MR25	1%	205E	5322 116 55365
R 2623	RES.METAL FILM	MR25	1%	5K36	5322 116 54597
R 2624	RES.METAL FILM	MR25	1%	11K	5322 116 54623
R 2626	RES.METAL FILM	MR25	1%	133E	5322 116 54482
R 2627	RES.METAL FILM	MR25	1%	402E	5322 116 54519
R 2628	RES.METAL FILM	MR25	1%	5K36	5322 116 54597
R 2629	RES.METAL FILM	MR25	1%	15K4	5322 116 55459
R 2631	RES.METAL FILM	MR25	1%	681E	4822 116 51233
R 2632	RES.METAL FILM	MR25	1%	100K	4822 116 51268
R 2633	RES.METAL FILM	MR25	1%	590E	5322 116 50561
R 2634	RES.METAL FILM	MR25	1%	8K25	5322 116 54558
R 2636	RES.METAL FILM	MR25	1%	14K7	5322 116 54632
R 2637	RES.METAL FILM	MR25	1%	100E	5322 116 55549
R 2638	RES.METAL FILM	MR25	0.5%	88K7	5322 116 55452
R 2639	RES.METAL FILM	MR25	1%	7K15	5322 116 54606
R 2641	RES.METAL FILM	MR25	1%	100K	4822 116 51268
R 2642	POTM.TRIMMER	MTP10	20%	1K	5322 100 10112
R 2643	POTM.TRIMMER	MTP10	20%	1K	5322 100 10112
R 2644	RES.METAL FILM	MR25	1%	1K05	5322 116 54552
R 2646	RES.METAL FILM	MR25	1%	51E1	5322 116 54442
R 2647	RES.METAL FILM	MR25	1%	15K4	5322 116 55459
R 2648	RES.METAL FILM	MR25	1%	1K69	5322 116 54567
R 2649	RES.METAL FILM	MR25	1%	7K15	5322 116 54606
R 2651	RES.METAL FILM	MR25	1%	100K	4822 116 51268
R 2652	RES.METAL FILM	MR25	1%	1K87	5322 116 52123
R 2653	RES.METAL FILM	MR25	1%	33K2	4822 116 51259
R 2654	RES.METAL FILM	MR25	1%	1K05	5322 116 54552
R 2656	RES.METAL FILM	MR25	1%	30E1	5322 116 50904
R 2657	POTM.TRIMMER	MTP10	20%	10K	5322 100 10113
R 2658	POTM.TRIMMER	MTP10	20%	1K	5322 100 10112
R 2661	POTM.TRIMMER	MTP10	20%	22K	5322 101 14069
R 2662	RES.METAL FILM	MR25	1%	30E1	5322 116 50904
R 2663	RES.METAL FILM	MR25	1%	33K2	4822 116 51259
R 2664	RES.METAL FILM	MR25	1%	226K	5322 116 54729
R 2665	RES.METAL FILM	MR25	1%	1K	4822 116 51235
R 2666	RES.METAL FILM	MR25	1%	226K	5322 116 54729
R 2667	RES.METAL FILM	MR25	1%	226K	5322 116 54729
R 2668	RES.METAL FILM	MR25	1%	226K	5322 116 54729
R 2669	RES.METAL FILM	MR25	1%	226K	5322 116 54729
R 2670	RES.METAL FILM	MR25	1%	511E	4822 116 51282
R 2671	RES.METAL FILM	MR25	1%	6K81	4822 116 51252
R 2672	RES.METAL FILM	MR25	1%	6K81	4822 116 51252
R 2673	RES.METAL FILM	MR25	1%	6K81	4822 116 51252
R 2674	RES.METAL FILM	MR25	1%	6K81	4822 116 51252
R 2675	RES.METAL FILM	MR25	1%	1K62	5322 116 55359
R 2676	RES.METAL FILM	MR25	1%	7K5	5322 116 54608
R 2677	RES.METAL FILM	MR25	1%	7K5	5322 116 54608
R 2678	RES.METAL FILM	MR25	1%	3K83	5322 116 54589
R 2679	RES.METAL FILM	MR25	1%	121E	5322 116 54426
R 2680	RES.METAL FILM	MR25	1%	1K62	5322 116 55359
R 2681	RES.METAL FILM	MR25	1%	1K15	5322 116 50415
R 2682	RES.METAL FILM	MR25	1%	10K	4822 116 51253
R 2683	RES.METAL FILM	MR25	1%	10K	4822 116 51253
R 2684	RES.METAL FILM	MR25	1%	226K	5322 116 54729
R 2686	RES.METAL FILM	MR25	1%	10K	4822 116 51253
R 2687	RES.METAL FILM	MR25	1%	10K	4822 116 51253
R 2688	RES.METAL FILM	MR25	1%	511E	4822 116 51282
R 2690	RES.METAL FILM	MR25	1%	511E	4822 116 51282

POSNR	DESCRIPTION			ORDERING CODE
R 2701	RES.METAL FILM	MR25	1% 909K	5322 116 55533
R 2702	RES.METAL FILM	MR25	1% 110K	5322 116 54701
R 2703	RES.METAL FILM	MR25	1% 681K	5322 116 55284
R 2704	RES.CARBON	0,125W	5% 100M	5322 111 30376
R 2706	RES.METAL FILM	MR25	1% 866E	5322 116 54543
R 2707	RES.SAFETY	MR25	1% 7K87	5322 116 50458
R 2708	RES.METAL FILM	MR25	1% 5K11	5322 116 54595
R 2709	RES.METAL FILM	MR25	1% 5E11	5322 116 54192
R 2711	RES.METAL FILM	MR25	1% 10E	5322 116 50452
R 2712	RES.METAL FILM	MR25	1% 154K	5322 116 54714
R 2713	RES.METAL FILM	MR25	1% 215K	5322 116 54728
R 2714	RES.METAL FILM	MR25	1% 100E	5322 116 55549
R 2716	RES.METAL FILM	MR25	1% 10K	4822 116 51253
R 2717	RES.METAL FILM	MR25	1% 10K	4822 116 51253
R 2718	RES.METAL FILM	MR25	1% 5E11	5322 116 54192
R 2719	RES.METAL FILM	MR25	1% 10E	5322 116 50452
R 2721	RES.METAL FILM	MR25	1% 6K81	4822 116 51252
R 2722	RES.METAL FILM	MR25	1% 4K22	5322 116 50729
R 2723	RES.METAL FILM	MR25	1% 1K4	5322 116 54562
R 2724	RES.METAL FILM	MR25	1% 10K	4822 116 51253
R 2726	RES.METAL FILM	MR25	1% 10K	4822 116 51253
R 2727	RES.METAL FILM	MR25	1% 1K	4822 116 51235
R 2728	RES.METAL FILM	MR25	1% 10K	4822 116 51253
R 2729	RES.METAL FILM	MR25	1% 110K	5322 116 54701
R 2731	RES.METAL FILM	MR25	1% 40K2	5322 116 54665
R 2732	RES.METAL FILM	MR25	1% 10K	4822 116 51253
R 2733	RES.METAL FILM	MR25	1% 237K	5322 116 54732
R 2734	RES.METAL FILM	MR25	1% 187K	5322 116 54723
R 2736	RES.METAL FILM	MR25	1% 2K49	5322 116 50581
R 2737	RES.METAL FILM	MR25	1% 1K69	5322 116 54567
R 2738	RES.METAL FILM	MR25	1% 22E6	5322 116 50491
R 2739	RES.METAL FILM	MR25	1% 205E	5322 116 55365
R 2741	RES.METAL FILM	MR25	1% 681K	5322 116 55284
R 2742	RES.METAL FILM	MR25	1% 6K81	4822 116 51252
R 2743	RES.METAL FILM	MR25	1% 10K	4822 116 51253
R 2744	RES.METAL FILM	MR25	1% 10K	4822 116 51253
R 2746	RES.METAL FILM	MR25	1% 10K	4822 116 51253
R 2747	RES.METAL FILM	MR25	1% 51E1	5322 116 54442
R 2748	RES.METAL FILM	MR25	1% 590E	5322 116 50561
R 2749	RES.METAL FILM	MR25	1% 10K	4822 116 51253
R 2751	RES.METAL FILM	MR25	1% 715E	5322 116 50571
R 2752	RES.METAL FILM	MR25	1% 82K5	5322 116 55374
R 2753	POTM.TRIMMER	MTP10	20% 220E	5322 101 14009
R 2754	RES.METAL FILM	MR25	1% 2K37	5322 116 54576
R 2756	RES.METAL FILM	MR25	1% 3K48	5322 116 55367
R 2757	RES.METAL FILM	MR25	1% 82K5	5322 116 55374
R 2758	RES.METAL FILM	MR25	1% 215K	5322 116 54728
R 2759	RES.METAL FILM	MR25	1% 442E	5322 116 50592
R 2761	RES.METAL FILM	MR25	1% 75K	4822 116 51267
R 2763	RES.METAL FILM	MR25	1% 205E	5322 116 55365
R 2764	RES.METAL FILM	MR25	1% 681K	5322 116 55284
R 2766	RES.METAL FILM	MR25	1% 6K81	4822 116 51252
R 2767	RES.METAL FILM	MR25	1% 100K	4822 116 51268
R 2768	RES.METAL FILM	MR25	1% 1K	4822 116 51235
R 2769	RES.METAL FILM	MR25	1% 590E	5322 116 50561
R 2771	RES.METAL FILM	MR25	1% 10K	4822 116 51253
R 2772	RES.METAL FILM	MR25	1% 6K81	4822 116 51252
R 2773	RES.METAL FILM	MR25	1% 22E6	5322 116 50491
R 2774	RES.METAL FILM	MR25	1% 100E	5322 116 55549
R 2776	RES.METAL FILM	MR25	1% 2K74	5322 116 50636
R 2777	RES.METAL FILM	MR25	1% 3K83	5322 116 54589
R 2778	RES.METAL FILM	MR25	1% 140E	5322 116 55568
R 2779	RES.METAL FILM	MR25	1% 5E11	5322 116 54192
R 2781	RES.METAL FILM	MR25	1% 10K5	5322 116 50731
R 2782	RES.METAL FILM	MR25	1% 5E11	5322 116 54192

POSNR	DESCRIPTION			ORDERING CODE
R 2783	RES.METAL FILM	MR25	1% 100K	4822 116 51268
R 2784	RES.METAL FILM	MR25	1% 100E	5322 116 55549
R 2786	RES.METAL FILM	MR25	1% 10K	4822 116 51253
R 2787	RES.METAL FILM	MR25	1% 1K	4822 116 51235
R 2788	RES.METAL FILM	MR25	1% 30K1	5322 116 54655
R 2789	RES.METAL FILM	MR25	1% 10K	4822 116 51253
R 2791	RES.METAL FILM	MR25	1% 30K1	5322 116 54655
R 2792	RES.METAL FILM	MR25	1% 10K	4822 116 51253
R 2793	RES.METAL FILM	MR25	1% 3K32	4822 116 51247
R 2794	RES.METAL FILM	MR25	1% 78E7	5322 116 50578
R 2795	RES.METAL FILM	MR25	1% 154E	5322 116 50506
R 2796	RES.METAL FILM	MR25	1% 1K	4822 116 51235
R 2797	RES.METAL FILM	MR25	1% 3K32	4822 116 51247
R 2798	RES.METAL FILM	MR25	1% 3K01	4822 116 51246
R 2799	RES.METAL FILM	MR25	1% 1K54	5322 116 50586
R 2801	RES.METAL FILM	MR25	1% 10K	4822 116 51253
R 2802	RES.METAL FILM	MR25	1% 10K	4822 116 51253
R 2803	RES.METAL FILM	MR25	1% 10K	4822 116 51253
R 2804	RES.METAL FILM	MR25	1% 10K	4822 116 51253
R 2806	RES.METAL FILM	MR25	1% 10K	4822 116 51253
R 2807	RES.METAL FILM	MR25	1% 10K	4822 116 51253
R 2808	RES.METAL FILM	MR25	1% 10K	4822 116 51253
R 2809	RES.METAL FILM	MR25	1% 10K	4822 116 51253
R 2811	RES.METAL FILM	MR25	1% 115E	5322 116 54476
R 2812	RES.METAL FILM	MR25	1% 1K	4822 116 51235
R 2813	RES.METAL FILM	MR25	1% 1K	4822 116 51235
R 2814	RES.METAL FILM	MR25	1% 590E	5322 116 50561
R 2816	RES.METAL FILM	MR25	1% 10K	4822 116 51253
R 2817	RES.METAL FILM	MR25	1% 115E	5322 116 54476
R 2818	RES.METAL FILM	MR25	1% 5K11	5322 116 54595
R 2819	POTM.TRIMMER	MTP10	20% 220E	5322 101 14009
R 2820	RES.METAL FILM	MR25	1% 787E	5322 116 54538
R 2821	RES.METAL FILM	MR25	1% 22E6	5322 116 50491
R 2822	RES.METAL FILM	MR25	1% 383E	5322 116 55368
R 2823	RES.METAL FILM	MR25	1% 511E	4822 116 51282
R 2824	RES.METAL FILM	MR25	1% 1K54	5322 116 50586
R 2825	RES.METAL FILM	MR25	1% 51E1	5322 116 54442
R 2826	RES.METAL FILM	MR25	1% 22E6	5322 116 50491
R 2827	RES.METAL FILM	MR25	1% 2K49	5322 116 50581
R 2828	RES.METAL FILM	MR25	1% 1K27	5322 116 50555
R 2829	RES.METAL FILM	MR25	1% 590E	5322 116 50561
R 2830	RES.METAL FILM	MR25	1% 51E1	5322 116 54442
R 2831	RES.METAL FILM	MR25	1% 1K15	5322 116 50415
R 2832	RES.METAL FILM	MR25	1% 22E6	5322 116 50491
R 2833	RES.METAL FILM	MR25	1% 511E	4822 116 51282
R 2834	RES.METAL FILM	MR25	1% 22E6	5322 116 50491
R 2835	RES.METAL FILM	MR25	1% 348E	5322 116 54515
R 2836	RES.METAL FILM	MR25	1% 1K62	5322 116 55359
R 2837	RES.METAL FILM	MR25	1% 4K22	5322 116 50729
R 2838	RES.METAL FILM	MR25	1% 1K62	5322 116 55359
R 2839	RES.METAL FILM	MR25	1% 22E6	5322 116 50491
R 2840	RES.METAL FILM	MR25	1% 51E1	5322 116 54442
R 2841	RES.METAL FILM	MR25	1% 22E6	5322 116 50491
R 2842	RES.METAL FILM	MR25	1% 1K62	5322 116 55359
R 2843	RES.METAL FILM	MR25	1% 4K22	5322 116 50729
R 2844	RES.METAL FILM	MR25	1% 1K62	5322 116 55359
R 2845	RES.METAL FILM	MR25	1% 348E	5322 116 54515
R 2846	RES.METAL FILM	MR25	1% 22E6	5322 116 50491
R 2847	RES.METAL FILM	MR25	1% 10K	4822 116 51253
R 2848	RES.METAL FILM	MR25	1% 10K	4822 116 51253
R 2849	RES.METAL FILM	MR25	1% 10K	4822 116 51253
R 2850	RES.METAL FILM	MR25	1% 348E	5322 116 54515
R 2851	RES.METAL FILM	MR25	1% 511E	4822 116 51282
R 2852	RES.METAL FILM	MR25	1% 590E	5322 116 50561
R 2853	RES.METAL FILM	MR25	1% 4K42	5322 116 50556

POSNR	DESCRIPTION				ORDERING CODE
R 2854	RES.METAL FILM	MR25	1%	1K87	5322 116 52123
R 2855	RES.METAL FILM	MR25	1%	51E1	5322 116 54442
R 2856	RES.METAL FILM	MR25	1%	10K	4822 116 51253
R 2857	POTM.TRIMMER	MTP10	20%	470E	5322 101 14047
R 2858	RES.METAL FILM	MR25	1%	4K64	5322 116 50484
R 2859	POTM.TRIMMER	MTP10	20%	1K	5322 100 10112
R 2860	RES.METAL FILM	MR25	1%	348E	5322 116 54515
R 2861	POTM.TRIMMER	MTP10	20%	1K	5322 100 10112
R 2862	RES.METAL FILM	MR25	1%	8K25	5322 116 54558
R 2863	RES.METAL FILM	MR25	1%	40E2	5322 116 50926
R 2864	RES.METAL FILM	MR25	1%	1K	4822 116 51235
R 2866	RES.METAL FILM	MR25	1%	40E2	5322 116 50926
R 2867	POTM.TRIMMER	MTP10	20%	10K	5322 100 10113
R 2901	RES.METAL FILM	MR25	1%	1E	4822 116 51179
R 2902	RES.METAL FILM	MR25	1%	1E	4822 116 51179
R 2903	RES.METAL FILM	MR25	1%	22E6	5322 116 50491
R 2904	RES.METAL FILM	MR25	1%	2E15	5322 116 55536
R 2907	RES.METAL FILM	MR25	1%	5E11	5322 116 54192
R 2908	RES.METAL FILM	MR25	1%	5E11	5322 116 54192
R 2909	RES.METAL FILM	MR25	1%	1M	5322 116 55535
R 2910	POTM.TRIMMER	MTP10	20%	2K2	5322 101 14008
R 2911	POTM.TRIMMER	MTP10	20%	100K	5322 101 14071
R 2912	RES.METAL FILM	MR25	1%	22K6	5322 116 50481
R 2913	RES.METAL FILM	MR25	1%	6K49	5322 116 54603
R 2914	RES.METAL FILM	MR25	1%	105K	5322 116 55356
R 2916	RES.METAL FILM	MR25	1%	10K	4822 116 51253
R 2917	RES.METAL FILM	MR25	1%	121K	5322 116 54704
R 2918	RES.METAL FILM	MR25	1%	681E	4822 116 51233
R 2919	RES.METAL FILM	MR25	1%	2K49	5322 116 50581
R 2921	RES.METAL FILM	MR25	1%	5K11	5322 116 54595
R 2922	RES.METAL FILM	MR25	1%	5K11	5322 116 54595
R 2923	RES.METAL FILM	MR25	1%	10K	4822 116 51253
R 2924	RES.METAL FILM	MR25	1%	6K81	4822 116 51252
R 2925	RES.METAL FILM	MR25	1%	205E	5322 116 55365
R 2926	RES.METAL FILM	MR25	1%	1K	4822 116 51235
R 2927	RES.METAL FILM	MR25	1%	1K	4822 116 51235
R 2928	RES.METAL FILM	MR25	1%	1K	4822 116 51235
R 2929	RES.METAL FILM	MR25	1%	1K	4822 116 51235
R 2930	RES.METAL FILM	MR25	1%	205E	5322 116 55365
R 2931	RES.METAL FILM	MR25	1%	1K21	5322 116 54557
R 2932	RES.METAL FILM	MR25	1%	27K4	5322 116 50559
R 2933	RES.METAL FILM	MR25	1%	2K05	5322 116 50664
R 2934	RES.METAL FILM	MR25	1%	511E	4822 116 51282
R 2935	RES.METAL FILM	MR25	1%	215E	5322 116 55274
R 2936	RES.METAL FILM	MR25	1%	205E	5322 116 55365
R 2937	RES.METAL FILM	MR25	1%	10E	5322 116 50452
R 2938	RES.METAL FILM	MR25	1%	2K05	5322 116 50664
R 2939	RES.METAL FILM	MR25	1%	30E1	5322 116 50904
R 2940	RES.METAL FILM	MR25	1%	100E	5322 116 55549
R 2941	RES.METAL FILM	MR25	1%	825E	5322 116 54541
R 2942	RES.METAL FILM	MR25	1%	2K15	5322 116 50767
R 2943	RES.METAL FILM	MR25	1%	511E	4822 116 51282
R 2944	RES.METAL FILM	MR25	1%	5K11	5322 116 54595
R 2945	RES.METAL FILM	MR25	1%	10E	5322 116 50452
R 2946	RES.METAL FILM	MR25	1%	5K11	5322 116 54595
R 2947	RES.METAL FILM	MR25	1%	4K64	5322 116 50484
R 2948	RES.METAL FILM	MR25	1%	205E	5322 116 55365
R 2949	RES.METAL FILM	MR25	1%	1K21	5322 116 54557
R 2950	RES.METAL FILM	MR25	1%	16E2	5322 116 54431
R 2951	RES.METAL FILM	MR25	1%	205E	5322 116 55365
R 2952	RES.METAL FILM	MR25	1%	100E	5322 116 55549
R 2953	RES.METAL FILM	MR25	1%	3K01	4822 116 51246
R 2954	RES.METAL FILM	MR25	1%	10K	4822 116 51253
R 2955	RES.METAL FILM	MR25	1%	249E	5322 116 54499
R 2956	RES.METAL FILM	MR25	1%	30K1	5322 116 54655

POSNR	DESCRIPTION				ORDERING CODE
R 2957	RES.METAL FILM	MR25	1%	100E	5322 116 55549
R 2958	POTM.TRIMMER	MTP10	20%	10K	5322 100 10113
R 2959	RES.METAL FILM	MR25	1%	1K	4822 116 51235
R 2960	RES.METAL FILM	MR25	1%	681E	4822 116 51233
R 2961	RES.METAL FILM	MR25	1%	1K	4822 116 51235
R 2962	RES.METAL FILM	MR25	1%	205E	5322 116 55365
R 2963	RES.METAL FILM	MR25	1%	205E	5322 116 55365
R 2964	RES.METAL FILM	MR25	1%	1K	4822 116 51235
R 2965	RES.METAL FILM	MR25	1%	287E	5322 116 54506
R 2966	RES.METAL FILM	MR25	1%	1K	4822 116 51235
R 2967	RES.METAL FILM	MR25	1%	2K15	5322 116 50767
R 2968	RES.METAL FILM	MR25	1%	511E	4822 116 51282
R 2969	RES.METAL FILM	MR25	1%	1K	4822 116 51235
R 3001	RES.METAL FILM	MR25	1%	249E	5322 116 54499
R 3002	RES.METAL FILM	MR25	1%	590E	5322 116 50561
R 3003	RES.METAL FILM	MR25	1%	33E2	5322 116 50527
R 3004	RES.METAL FILM	MR25	1%	100E	5322 116 55549
R 3005	RES.METAL FILM	MR25	1%	274E	5322 116 54504
R 3006	RES.METAL FILM	MR25	1%	100E	5322 116 55549
R 3007	RES.METAL FILM	MR25	1%	24E9	5322 116 50903
R 3008	RES.METAL FILM	MR25	1%	750E	4822 116 51234
R 3009	POTM.TRIMMER	MTP10	20%	2K2	5322 101 14008
R 3011	RES.METAL FILM	MR25	1%	261E	5322 116 54502
R 3012	RES.METAL FILM	MR25	1%	274E	5322 116 54504
R 3013	RES.METAL FILM	MR25	1%	2K87	5322 116 55279
R 3014	RES.METAL FILM	MR25	1%	2K87	5322 116 55279
R 3016	RES.METAL FILM	MR25	1%	2K26	5322 116 50675
R 3017	RES.METAL FILM	MR25	1%	249E	5322 116 54499
R 3018	RES.METAL FILM	MR25	1%	3K83	5322 116 54589
R 3019	RES.METAL FILM	MR25	1%	75E	5322 116 54459
R 3020	RES.METAL FILM	MR25	1%	90E9	5322 116 54466
R 3021	RES.METAL FILM	MR25	1%	178E	5322 116 54492
R 3022	RES.METAL FILM	MR25	1%	178E	5322 116 54492
R 3023	RES.METAL FILM	MR25	1%	100K	4822 116 51268
R 3024	RES.METAL FILM	MR25	1%	6K81	4822 116 51252
R 3026	RES.METAL FILM	MR25	1%	11K	5322 116 54623
R 3027	RES.METAL FILM	MR25	1%	75E	5322 116 54459
R 3028	RES.METAL FILM	MR25	1%	2K26	5322 116 50675
R 3029	POTM.TRIMMER	MTP10	20%	2K2	5322 101 14008
R 3030	RES.METAL FILM	MR25	1%	3K32	4822 116 51247
R 3031	RES.METAL FILM	MR25	1%	90E9	5322 116 54466
R 3032	RES.METAL FILM	MR25	1%	30E1	5322 116 50904
R 3033	RES.METAL FILM	MR25	1%	30E1	5322 116 50904
R 3034	RES.METAL FILM	MR25	1%	33E2	5322 116 50527
R 3036	RES.METAL FILM	MR25	1%	619E	4822 116 51232
R 3037	RES.METAL FILM	MR25	1%	75E	5322 116 54459
R 3038	RES.METAL FILM	MR25	1%	215E	5322 116 55274
R 3039	POTM.TRIMMER	MTP10	20%	10K	5322 100 10113
R 3040	RES.METAL FILM	MR25	1%	36E5	5322 116 50409
R 3041	RES.METAL FILM	MR25	1%	100E	5322 116 55549
R 3044	RES.METAL FILM	MR25	1%	100E	5322 116 55549
R 3045	RES.METAL FILM	MR25	1%	36E5	5322 116 50409
R 3046	RES.METAL FILM	MR25	1%	619E	4822 116 51232
R 3047	RES.METAL FILM	MR25	1%	33E2	5322 116 50527
R 3048	RES.METAL FILM	MR25	1%	187E	5322 116 54494
R 3049	RES.METAL FILM	MR25	1%	187E	5322 116 54494
R 3050	RES.METAL FILM	MR25	1%	127E	5322 116 54479
R 3051	RES.METAL FILM	MR25	1%	196E	5322 116 55273
R 3052	RES.METAL FILM	MR25	1%	10K	4822 116 51253
R 3053	RES.METAL FILM	MR25	1%	402E	5322 116 54519
R 3054	RES.METAL FILM	MR25	1%	4K22	5322 116 50729
R 3055	RES.METAL FILM	MR25	1%	127E	5322 116 54479
R 3056	POTM.TRIMMER	MTP10	20%	220E	5322 101 14009
R 3057	POTM.TRIMMER	MTP10	20%	1K	5322 100 10112
R 3058	RES.METAL FILM	MR25	1%	100E	5322 116 55549

POSNR	DESCRIPTION			ORDERING CODE
R 3059	RES.METAL FILM	MR25	1% 2K15	5322 116 50767
R 3061	RES.METAL FILM	MR25	1% 1K78	5322 116 50515
R 3063	RES.METAL FILM	MR25	1% 2K87	5322 116 55279
R 3064	RES.METAL FILM	MR25	1% 2K87	5322 116 55279
R 3066	RES.METAL FILM	MR25	1% 33E2	5322 116 50527
R 3067	RES.METAL FILM	MR25	1% 2K87	5322 116 55279
R 3068	RES.METAL FILM	MR25	1% 75E	5322 116 54459
R 3069	RES.METAL FILM	MR25	1% 2K87	5322 116 55279
R 3071	RES.METAL FILM	MR25	1% 12K7	5322 116 50443
R 3072	RES.METAL FILM	MR25	1% 7K5	5322 116 54608
R 3201	POTM.TRIMMER	MTP10	20% 10K	5322 101 14066
R 3202	POTM.TRIMMER	MTP10	20% 10K	5322 101 14066
R 3203	POTM.TRIMMER	MTP10	20% 10K	5322 101 14066
R 3204	POTM.TRIMMER	MTP10	20% 10K	5322 101 14066
R 3206	POTM.TRIMMER	MTP10	20% 22K	5322 100 10118
R 3207	POTM.TRIMMER	MTP10	20% 22K	5322 100 10118
R 3208	POTM.TRIMMER	MTP10	20% 22K	5322 100 10118
R 3209	POTM.TRIMMER	MTP10	20% 22K	5322 100 10118
R 3211	POTM.TRIMMER	MTP10	20% 10K	5322 101 14066
R 3212	RES.METAL FILM	MR25	1% 5K62	4822 116 51281
R 3213	RES.METAL FILM	MR25	1% 5K62	4822 116 51281
R 3214	RES.METAL FILM	MR25	1% 5K62	4822 116 51281
R 3216	RES.METAL FILM	MR25	1% 5K62	4822 116 51281
R 3217	RES.METAL FILM	MR25	1% 5K62	4822 116 51281
R 3218	RES.METAL FILM	MR25	1% 5K62	4822 116 51281
R 3219	POTM.TRIMMER	MTP10	20% 10K	5322 101 14066
R 3221	POTM.TRIMMER	MTP10	20% 22K	5322 100 10118
R 3222	POTM.TRIMMER	MTP10	20% 22K	5322 100 10118
R 3223	RES.METAL FILM	MR25	1% 100E	5322 116 55549
R 3224	RES.METAL FILM	MR25	1% 68K1	4822 116 51266
R 3226	POTM.TRIMMER	MTP10	20% 10K	5322 101 14066
R 3227	RES.METAL FILM	MR25	1% 14K7	5322 116 54632
R 3228	RES.METAL FILM	MR25	1% 6K81	4822 116 51252
R 3229	RES.METAL FILM	MR25	1% 6K81	4822 116 51252
R 3231	RES.METAL FILM	MR25	1% 14K7	5322 116 54632
R 3232	RES.METAL FILM	MR25	1% 31K6	5322 116 54657
R 3233	RES.METAL FILM	MR25	1% 42K2	5322 116 50474
R 3234	RES.METAL FILM	MR25	1% 31K6	5322 116 54657
R 3236	RES.METAL FILM	MR25	1% 31K6	5322 116 54657
R 3237	RES.METAL FILM	MR25	1% 3K48	5322 116 55367
R 3238	RES.METAL FILM	MR25	1% 17E8	5322 116 50418
R 3239	RES.METAL FILM	MR25	1% 8K25	5322 116 54558
R 3240	RES.METAL FILM	MR25	1% 681E	4822 116 51233
R 3242	RES.METAL FILM	MR25	1% 46K4	5322 116 50557
R 3243	RES.METAL FILM	MR25	1% 82E5	5322 116 55357
R 3244	RES.METAL FILM	MR25	1% 133E	5322 116 54482
R 3246	RES.METAL FILM	MR25	1% 82E5	5322 116 55357
R 3247	RES.METAL FILM	MR25	1% 133E	5322 116 54482
R 3248	RES.METAL FILM	MR25	1% 316E	5322 116 54511
R 3249	RES.METAL FILM	MR25	1% 316E	5322 116 54511
R 3251	RES.METAL FILM	MR25	1% 316E	5322 116 54511
R 3252	RES.METAL FILM	MR25	1% 316E	5322 116 54511
R 3253	RES.METAL FILM	MR25	1% 2K87	5322 116 55279
R 3254	RES.METAL FILM	MR25	1% 2K87	5322 116 55279
R 3256	RES.METAL FILM	MR25	1% 2K87	5322 116 55279
R 3257	RES.METAL FILM	MR25	1% 3K48	5322 116 55367
R 3258	RES.METAL FILM	MR25	1% 28K7	5322 116 55462
R 3259	RES.METAL FILM	MR25	1% 316E	5322 116 54511
R 3260	RES.METAL FILM	MR25	1% 8K25	5322 116 54558
R 3261	RES.METAL FILM	MR25	1% 316E	5322 116 54511
R 3262	RES.METAL FILM	MR25	1% 6K81	4822 116 51252
R 3263	RES.METAL FILM	MR25	1% 6K81	4822 116 51252
R 3264	RES.METAL FILM	MR25	1% 316E	5322 116 54511
R 3266	RES.METAL FILM	MR25	1% 2K87	5322 116 55279
R 3267	RES.METAL FILM	MR25	1% 316E	5322 116 54511

POSNR	DESCRIPTION				ORDERING CODE
R 3268	RES.METAL FILM	MR25	1%	316E	5322 116 54511
R 3269	RES.METAL FILM	MR25	1%	2K87	5322 116 55279
R 3271	RES.METAL FILM	MR25	1%	2K87	5322 116 55279
R 3272	RES.METAL FILM	MR25	1%	2K37	5322 116 54576
R 3273	POTM.TRIMMER	MTP10	20%	10K	5322 101 14066
R 3276	RES.METAL FILM	MR25	1%	215E	5322 116 55274
R 3277	RES.METAL FILM	MR25	1%	4K64	5322 116 50484
R 3278	RES.METAL FILM	MR25	1%	8K25	5322 116 54558
R 3279	RES.METAL FILM	MR25	1%	1K	4822 116 51235
R 3281	RES.METAL FILM	MR25	1%	316E	5322 116 54511
R 3282	RES.METAL FILM	MR25	1%	316E	5322 116 54511
R 3283	RES.METAL FILM	MR25	1%	316E	5322 116 54511
R 3284	RES.METAL FILM	MR25	1%	316E	5322 116 54511
R 3286	RES.METAL FILM	MR25	1%	316E	5322 116 54511
R 3287	RES.METAL FILM	MR25	1%	59K	5322 116 54678
R 3288	RES.METAL FILM	MR25	1%	56E2	5322 116 54446
R 3289	RES.METAL FILM	MR25	1%	56E2	5322 116 54446
R 3291	RES.METAL FILM	MR25	1%	8K25	5322 116 54558
R 3292	RES.METAL FILM	MR25	1%	8K25	5322 116 54558
R 3293	RES.METAL FILM	MR25	1%	4K22	5322 116 50729
R 3294	RES.METAL FILM	MR25	1%	4K22	5322 116 50729
R 3295	RES.METAL FILM	MR25	1%	56E2	5322 116 54446
R 3296	RES.METAL FILM	MR25	1%	56E2	5322 116 54446
R 3297	RES.METAL FILM	MR25	1%	1K	4822 116 51235
R 3298	RES.METAL FILM	MR25	1%	8K25	5322 116 54558
R 3299	RES.METAL FILM	MR25	1%	14K7	5322 116 54632
R 3301	RES.METAL FILM	MR25	1%	1K	4822 116 51235
R 3302	RES.METAL FILM	MR25	1%	14K7	5322 116 54632
R 3303	RES.METAL FILM	MR25	1%	4K64	5322 116 50484
R 3304	RES.METAL FILM	MR25	1%	8K25	5322 116 54558
R 3305	RES.METAL FILM	MR25	1%	56E2	5322 116 54446
R 3306	RES.METAL FILM	MR25	1%	1K	4822 116 51235
R 3307	RES.METAL FILM	MR25	1%	2K87	5322 116 55279
R 3308	RES.METAL FILM	MR25	1%	316E	5322 116 54511
R 3309	RES.METAL FILM	MR25	1%	316E	5322 116 54511
R 3310	RES.METAL FILM	MR25	1%	681E	4822 116 51233
R 3311	RES.METAL FILM	MR25	1%	316E	5322 116 54511
R 3312	RES.METAL FILM	MR25	1%	2K87	5322 116 55279
R 3313	RES.METAL FILM	MR25	1%	2K87	5322 116 55279
R 3314	RES.METAL FILM	MR25	1%	316E	5322 116 54511
R 3315	RES.METAL FILM	MR25	1%	61E9	5322 116 54451
R 3316	RES.METAL FILM	MR25	1%	9K09	4822 116 51284
R 3317	RES.METAL FILM	MR25	1%	215E	5322 116 55274
R 3318	RES.METAL FILM	MR25	1%	825E	5322 116 54541
R 3320	RES.METAL FILM	MR25	1%	82E5	5322 116 55357
R 3323	RES.METAL FILM	MR25	1%	316E	5322 116 54511
R 3401	RES.METAL FILM	MR25	1%	51E1	5322 116 54442
R 3402	RES.METAL FILM	MR25	1%	316E	5322 116 54511
R 3403	RES.METAL FILM	MR25	1%	316E	5322 116 54511
R 3404	RES.METAL FILM	MR25	1%	133E	5322 116 54482
R 3406	RES.METAL FILM	MR25	1%	82E5	5322 116 55357
R 3409	RES.METAL FILM	MR25	1%	196E	5322 116 55273
R 3411	RES.METAL FILM	MR25	1%	196E	5322 116 55273
R 3412	RES.METAL FILM	MR25	1%	51E1	5322 116 54442
R 3413	RES.METAL FILM	MR25	1%	133E	5322 116 54482
R 3414	RES.METAL FILM	MR25	1%	82E5	5322 116 55357
R 3416	RES.METAL FILM	MR25	1%	196E	5322 116 55273
R 3417	RES.METAL FILM	MR25	1%	215E	5322 116 55274
R 3418	RES.METAL FILM	MR25	1%	10E	5322 116 50452
R 3419	RES.METAL FILM	MR25	1%	215E	5322 116 55274

POSNR	DESCRIPTION			ORDERING CODE
R 3421	RES.METAL FILM	MR25	1% 17E8	5322 116 50418
R 3422	RES.METAL FILM	MR25	1% 619E	4822 116 51232
R 3423	RES.METAL FILM	MR25	1% 1K	4822 116 51235
R 3426	RES.METAL FILM	MR25	1% 422E	5322 116 50459
R 3427	RES.METAL FILM	MR25	1% 10K	4822 116 51253
R 3428	RES.METAL FILM	MR25	1% 2K61	5322 116 50671
R 3429	RES.METAL FILM	MR25	1% 196E	5322 116 55273
R 3431	RES.METAL FILM	MR25	1% 215E	5322 116 55274
R 3432	RES.METAL FILM	MR25	1% 6K19	5322 116 55426
R 3433	RES.METAL FILM	MR25	1% 6K19	5322 116 55426
R 3434	RES.METAL FILM	MR25	1% 2K15	5322 116 50767
R 3436	RES.METAL FILM	MR25	1% 2K15	5322 116 50767
R 3437	RES.METAL FILM	MR25	1% 51E1	5322 116 54442
R 3438	RES.METAL FILM	MR25	1% 51E1	5322 116 54442
R 3439	RES.METAL FILM	MR25	1% 4K64	5322 116 50484
R 3441	RES.METAL FILM	MR25	1% 196E	5322 116 55273
R 3442	RES.METAL FILM	MR25	1% 196E	5322 116 55273

Integrated Circuits

POSNR	DESCRIPTION		ORDERING CODE
D 0201	INTEGR.CIRCUIT	SN74LS373N	5322 209 86062
D 0202	INTEGR.CIRCUIT	SN74LS373N	5322 209 86062
D 0203	INTEGR.CIRCUIT	N74LS138N	5322 209 85647
D 0204	INTEGR.CIRCUIT	CA3081N	4822 209 80525
D 0206	INTEGR.CIRCUIT	N74LS00N	5322 209 84823
D 0241	INTEGR.CIRCUIT	SN74LS257AN	5322 209 86549
D 0242	INTEGR.CIRCUIT	SN74LS257AN	5322 209 86549
D 0243	INTEGR.CIRCUIT	SN74LS257AN	5322 209 86549
D 0244	INTEGR.CIRCUIT	N74LS08N	5322 209 84995
D 0246	INTEGR.CIRCUIT	N74LS138N	5322 209 85647
D 0247	INTEGR.CIRCUIT	SN74LS257AN	5322 209 86549
D 0248	INTEGR.CIRCUIT	SN74LS257AN	5322 209 86549
D 0249	INTEGR.CIRCUIT	SN74LS257AN	5322 209 86549
D 0401	INTEGR.CIRCUIT	MCM51L01P45	5322 209 10155
D 0402	INTEGR.CIRCUIT	MCM51L01P45	5322 209 10155
D 0408	INTEGR.CIRCUIT	P8085AH	5322 209 50032
D 0409	INTEGR.CIRCUIT	N74LS74AN	4822 209 80782
D 0411	INTEGR.CIRCUIT	N74LS30N	5322 209 84985
D 0412	INTEGR.CIRCUIT	N74LS30N	5322 209 84985
D 0413	INTEGR.CIRCUIT	SN74LS373N	5322 209 86062
D 0414	INTEGR.CIRCUIT	SN74LS373N	5322 209 86062
D 0416	INTEGR.CIRCUIT	SN74LS373N	5322 209 86062
D 0417	INTEGR.CIRCUIT	SN74LS245N	5322 209 86225
D 0418	INTEGR.CIRCUIT	N74LS138N	5322 209 85647
D 0419	INTEGR.CIRCUIT	N74LS139N	5322 209 85839
D 0421	INTEGR.CIRCUIT	N74LS32N	5322 209 85311
D 0422	INTEGR.CIRCUIT	N74LS04N	4822 209 80783
D 0423	INTEGR.CIRCUIT	N74LS74AN	4822 209 80782
D 0424	INTEGR.CIRCUIT	HEF4528BP	4822 209 10277
D 0426	INTEGR.CIRCUIT	HEF4093BP	5322 209 14927
D 0428	INTEGR.CIRCUIT	N74LS04N	4822 209 80783
D 0429	INTEGR.CIRCUIT	N74LS74AN	4822 209 80782
D 0601	INTEGR.CIRCUIT	MCM51L01P45	5322 209 10155
D 0602	INTEGR.CIRCUIT	MCM51L01P45	5322 209 10155
D 0603	INTEGR.CIRCUIT	MCM51L01P45	5322 209 10155
D 0604	INTEGR.CIRCUIT	MCM51L01P45	5322 209 10155
D 0606	INTEGR.CIRCUIT	MCM51L01P45	5322 209 10155
D 0607	INTEGR.CIRCUIT	MCM51L01P45	5322 209 10155
D 0608	INTEGR.CIRCUIT	MCM51L01P45	5322 209 10155
D 0609	INTEGR.CIRCUIT	MCM51L01P45	5322 209 10155
D 0611	INTEGR.CIRCUIT	SN74LS257AN	5322 209 86549
D 0612	INTEGR.CIRCUIT	SN74LS257AN	5322 209 86549
D 0613	INTEGR.CIRCUIT	SN74LS373N	5322 209 86062
D 0614	INTEGR.CIRCUIT	SN74LS244N	5322 209 86017
D 0616	INTEGR.CIRCUIT	SN74LS244N	5322 209 86017
D 0617	INTEGR.CIRCUIT	SN74LS244N	5322 209 86017
D 0618	INTEGR.CIRCUIT	N74LS266N	5322 209 86163
D 0619	INTEGR.CIRCUIT	N74LS266N	5322 209 86163
D 0621	INTEGR.CIRCUIT	NE5018N	5322 209 86421
D 0622	INTEGR.CIRCUIT	NE5018N	5322 209 86421
D 0623	INTEGR.CIRCUIT	N74LS86N	5322 209 84997
D 0624	INTEGR.CIRCUIT	N74LS86N	5322 209 84997
D 0626	INTEGR.CIRCUIT	N74LS04N	4822 209 80783
D 0627	INTEGR.CIRCUIT	N74LS00N	5322 209 84823
D 0628	INTEGR.CIRCUIT	N74LS153N	5322 209 85488
D 0629	INTEGR.CIRCUIT	N74LS02N	5322 209 85312
D 0701	INTEGR.CIRCUIT	HEF4731VP	5322 209 14859
D 0702	INTEGR.CIRCUIT	HEF4731VP	5322 209 14859
D 0703	INTEGR.CIRCUIT	HEF4731VP	5322 209 14859
D 0704	INTEGR.CIRCUIT	HEF4731VP	5322 209 14859
D 0706	INTEGR.CIRCUIT	HEF4731VP	5322 209 14859
D 0707	INTEGR.CIRCUIT	HEF4731VP	5322 209 14859

POSNR	DESCRIPTION		ORDERING CODE
D 0708	INTEGR.CIRCUIT	HEF4731VP	5322 209 14859
D 0709	INTEGR.CIRCUIT	HEF4731VP	5322 209 14859
D 0711	INTEGR.CIRCUIT	HEF4731VP	5322 209 14859
D 0712	INTEGR.CIRCUIT	HEF4508BP	5322 209 14559
D 0713	INTEGR.CIRCUIT	HEF4508BP	5322 209 14559
D 0714	INTEGR.CIRCUIT	NE5018N	5322 209 86421
D 0716	INTEGR.CIRCUIT	HEF40097BP	4822 209 10317
D 0717	INTEGR.CIRCUIT	HEF40097BP	4822 209 10317
D 0718	INTEGR.CIRCUIT	HEF4001BP	4822 209 10246
D 0719	INTEGR.CIRCUIT	HEF4049BP	4822 209 10306
D 0801	INTEGR.CIRCUIT	HEF4081BP	4822 209 10269
D 0802	INTEGR.CIRCUIT	HEF4070BP	4822 209 10265
D 0803	INTEGR.CIRCUIT	HEF4008BP	5322 209 14214
D 0804	INTEGR.CIRCUIT	HEF4008BP	5322 209 14214
D 0806	INTEGR.CIRCUIT	HEF4539BP	5322 209 14442
D 0807	INTEGR.CIRCUIT	HEF4539BP	5322 209 14442
D 0808	INTEGR.CIRCUIT	HEF4073BP	4822 209 10266
D 0809	INTEGR.CIRCUIT	HEF4070BP	4822 209 10265
D 0811	INTEGR.CIRCUIT	HEF40097BP	4822 209 10317
D 0812	INTEGR.CIRCUIT	HEF40097BP	4822 209 10317
D 0813	INTEGR.CIRCUIT	HEF4081BP	4822 209 10269
D 0814	INTEGR.CIRCUIT	HEF4070BP	4822 209 10265
D 0816	INTEGR.CIRCUIT	HEF4008BP	5322 209 14214
D 0817	INTEGR.CIRCUIT	HEF4539BP	5322 209 14442
D 0818	INTEGR.CIRCUIT	HEF4539BP	5322 209 14442
D 0819	INTEGR.CIRCUIT	HEF4508BP	5322 209 14559
D 0821	INTEGR.CIRCUIT	ADC80AGZ-10	5322 209 86447
D 0822	INTEGR.CIRCUIT	NE5537H	5322 209 86444
D 0901	INTEGR.CIRCUIT	N74LS153N	5322 209 85488
D 0902	INTEGR.CIRCUIT	N74LS74AN	4822 209 80782
D 0903	INTEGR.CIRCUIT	N74LS00N	5322 209 84823
D 0904	INTEGR.CIRCUIT	NE5018N	5322 209 86421
D 0906	INTEGR.CIRCUIT	N74LS08N	5322 209 84995
D 0907	INTEGR.CIRCUIT	N74LS74AN	4822 209 80782
D 0908	INTEGR.CIRCUIT	N74LS74AN	4822 209 80782
D 0909	INTEGR.CIRCUIT	N74LS74AN	4822 209 80782
D 0911	INTEGR.CIRCUIT	N74LS153N	5322 209 85488
D 0912	INTEGR.CIRCUIT	N74LS11N	5322 209 85604
D 0913	INTEGR.CIRCUIT	N74LS74AN	4822 209 80782
D 0914	INTEGR.CIRCUIT	N74S00N	5322 209 84167
D 0916	INTEGR.CIRCUIT	N74LS153N	5322 209 85488
D 0917	INTEGR.CIRCUIT	SN74LS163AN	5322 209 85863
D 0918	INTEGR.CIRCUIT	SN74LS163AN	5322 209 85863
D 0919	INTEGR.CIRCUIT	N74LS04N	4822 209 80783
D 0921	INTEGR.CIRCUIT	N74LS153N	5322 209 85488
D 0922	INTEGR.CIRCUIT	N74LS00N	5322 209 84823
D 0923	INTEGR.CIRCUIT	N74LS42N	4822 209 80781
D 0924	INTEGR.CIRCUIT	N74LS74AN	4822 209 80782
D 0926	INTEGR.CIRCUIT	N74LS153N	5322 209 85488
D 0927	INTEGR.CIRCUIT	N74LS74AN	4822 209 80782
D 0928	INTEGR.CIRCUIT	SN74LS163AN	5322 209 85863
D 1102	INTEGR.CIRCUIT	OQ 0042	5322 209 10367
D 1103	INTEGR.CIRCUIT	LM78L15ACZ	4822 209 80889
D 1104	INTEGR.CIRCUIT	LF356N	5322 209 86422
D 1201	INTEGR.CIRCUIT	HEF4526BP	4822 209 10289
D 1202	INTEGR.CIRCUIT	HEF4526BP	4822 209 10289
D 1203	INTEGR.CIRCUIT	HEF4518BP	4822 209 10275
D 1204	INTEGR.CIRCUIT	HEF4518BP	4822 209 10275
D 1206	INTEGR.CIRCUIT	HEF4518BP	4822 209 10275
D 1207	INTEGR.CIRCUIT	HEF4520BP	5322 209 14189
D 1208	INTEGR.CIRCUIT	N74LS90N	5322 209 85255
D 1209	INTEGR.CIRCUIT	DM74S196N	5322 209 81328
D 1211	INTEGR.CIRCUIT	HEF4013BP	4822 209 10248
D 1212	INTEGR.CIRCUIT	UA741CN	4822 209 80617

POSNR	DESCRIPTION		ORDERING CODE	
D 1213	INTEGR.CIRCUIT	SP1658	5322 209 82475	
D 1214	INTEGR.CIRCUIT	HEF4051BP	4822 209 10262	
D 1216	INTEGR.CIRCUIT	N74LS139N	5322 209 85839	
D 1217	INTEGR.CIRCUIT	N74LS02N	5322 209 85312	
D 1218	INTEGR.CIRCUIT	N74LS00N	5322 209 84823	
D 1219	INTEGR.CIRCUIT	N74LS153N	5322 209 85488	
D 1221	INTEGR.CIRCUIT	SN74LS373N	5322 209 86062	
D 1222	INTEGR.CIRCUIT	N74LS74AN	4822 209 80782	
D 1223	INTEGR.CIRCUIT	N74S153N	5322 209 85688	
D 1224	INTEGR.CIRCUIT	MC10H174L	5322 209 81812	
D 1226	INTEGR.CIRCUIT	10124N	5322 209 86341	
D 1227	INTEGR.CIRCUIT	10231N	5322 209 86003	
D 1228	INTEGR.CIRCUIT	74LS32	5322 209 85311	
D 1229	INTEGR.CIRCUIT	N7404N	5322 209 86326	
D 1231	INTEGR.CIRCUIT	10125N	5322 209 86499	
D 1232	INTEGR.CIRCUIT	MC10216P	5322 209 84825	
D 1233	INTEGR.CIRCUIT	LM79L05ACZ	5322 209 86434	
D 1301	INTEGR.CIRCUIT	N74LS191N	5322 209 84989	
D 1302	INTEGR.CIRCUIT	N74LS191N	5322 209 84989	
D 1303	INTEGR.CIRCUIT	10124N	5322 209 86341	
D 1304	INTEGR.CIRCUIT	10231N	5322 209 86003	
D 1306	INTEGR.CIRCUIT	10137N	5322 209 81206	(without heat sink)
D 1307	INTEGR.CIRCUIT	10125N	5322 209 86499	
D 1308	INTEGR.CIRCUIT	SN74197N-00	5322 209 84516	
D 1309	INTEGR.CIRCUIT	N74LS193N	5322 209 85405	
D 1311	INTEGR.CIRCUIT	N74LS193N	5322 209 85405	
D 1312	INTEGR.CIRCUIT	N74LS193N	5322 209 85405	
D 1313	INTEGR.CIRCUIT	N74LS08N	5322 209 84995	
D 1314	INTEGR.CIRCUIT	N74LS74AN	4822 209 80782	
D 1316	INTEGR.CIRCUIT	N74LS08N	5322 209 84995	
D 1317	INTEGR.CIRCUIT	N74LS74AN	4822 209 80782	
D 1318	INTEGR.CIRCUIT	N74LS00N	5322 209 84823	
D 1319	INTEGR.CIRCUIT	UA741CN	4822 209 80617	
D 1321	INTEGR.CIRCUIT	SN74LS123N	5322 209 85266	
D 1322	INTEGR.CIRCUIT	N74LS107N	5322 209 85816	
D 1323	INTEGR.CIRCUIT	N74LS10N	5322 209 84996	
D 1324	INTEGR.CIRCUIT	SN74LS27N	5322 209 86076	
D 1326	INTEGR.CIRCUIT	SN74LS373N	5322 209 86062	
D 1327	INTEGR.CIRCUIT	NE5018N	5322 209 86421	
D 1328	INTEGR.CIRCUIT	NE5537H	5322 209 86444	
D 1329	INTEGR.CIRCUIT	NE5537H	5322 209 86444	
D 1331	INTEGR.CIRCUIT	UA741CN	4822 209 80617	
D 1501	INTEGR.CIRCUIT	UA7905UC	5322 130 44843	
D 1502	INTEGR.CIRCUIT	UA741CN	4822 209 80617	
D 1503	INTEGR.CIRCUIT	UA741CN	4822 209 80617	
D 1601	INTEGR.CIRCUIT	TDA1060	5322 209 85662	
D 1602	SENSOR	H11A550	5322 130 94015	
D 2001	INTEGR.CIRCUIT	LF356N	5322 209 86422	
D 2002	INTEGR.CIRCUIT	LM358P	5322 209 82076	
D 2003	INTEGR.CIRCUIT	LF356N	5322 209 86422	
D 2004	INTEGR.CIRCUIT	TL082CP	5322 209 86064	
D 2006	INTEGR.CIRCUIT	HEF4052BP	4822 209 10263	
D 2007	INTEGR.CIRCUIT	LF356N	5322 209 86422	
D 2008	INTEGR.CIRCUIT	HEF4053BP	5322 209 14121	
D 2009	INTEGR.CIRCUIT	TL082CP	5322 209 86064	
D 2011	INTEGR.CIRCUIT	HEF4052BP	4822 209 10263	
D 2012	INTEGR.CIRCUIT	HEF4052BP	4822 209 10263	
D 2013	INTEGR.CIRCUIT	HEF4052BP	4822 209 10263	
D 2014	INTEGR.CIRCUIT	TL082CP	5322 209 86064	
D 2016	INTEGR.CIRCUIT	TL082CP	5322 209 86064	

POSNR	DESCRIPTION		ORDERING CODE
D 2017	INTEGR.CIRCUIT	HEF4052BP	4822 209 10263
D 2018	INTEGR.CIRCUIT	HEF4052BP	4822 209 10263
D 2019	INTEGR.CIRCUIT	NE5537H	5322 209 86444
D 2021	INTEGR.CIRCUIT	LF356N	5322 209 86422
D 2022	INTEGR.CIRCUIT	N74LS00N	5322 209 84823
D 2023	INTEGR.CIRCUIT	OQ-0017	5322 209 85627
D 2024	INTEGR.CIRCUIT	NE5537H	5322 209 86444
D 2026	INTEGR.CIRCUIT	NE5537H	5322 209 86444
D 2401	INTEGR.CIRCUIT	SD5000N	5322 209 85748
D 2402	INTEGR.CIRCUIT	N7406N	5322 209 86327
D 2403	INTEGR.CIRCUIT	SD5000N	5322 209 85748
D 2404	INTEGR.CIRCUIT	OQ 0012	5322 209 85484
D 2406	INTEGR.CIRCUIT	OQ 0043	5322 209 86488
D 2407	INTEGR.CIRCUIT	LM308AN	5322 209 86056
D 2408	INTEGR.CIRCUIT	LM308AN	5322 209 86056
D 2409	INTEGR.CIRCUIT	OQ 0012	5322 209 85484
D 2411	INTEGR.CIRCUIT	SD5000N	5322 209 85748
D 2412	INTEGR.CIRCUIT	OQ 0012	5322 209 85484
D 2413	INTEGR.CIRCUIT	OQ 0043	5322 209 86488
D 2414	INTEGR.CIRCUIT	LM308AN	5322 209 86056
D 2416	INTEGR.CIRCUIT	LM308AN	5322 209 86056
D 2417	INTEGR.CIRCUIT	LM339AN	4822 209 80631
D 2418	INTEGR.CIRCUIT	SN74LS257AN	5322 209 86549
D 2419	INTEGR.CIRCUIT	SN74LS257AN	5322 209 86549
D 2421	INTEGR.CIRCUIT	UA324PC	5322 209 82561
D 2422	INTEGR.CIRCUIT	UA324PC	5322 209 82561
D 2423	INTEGR.CIRCUIT	N74LS32N	5322 209 85311
D 2424	INTEGR.CIRCUIT	SN74LS373N	5322 209 86062
D 2426	INTEGR.CIRCUIT	SN74LS373N	5322 209 86062
D 2427	INTEGR.CIRCUIT	SN74LS373N	5322 209 86062
D 2428	INTEGR.CIRCUIT	N74LS00N	5322 209 84823
D 2429	INTEGR.CIRCUIT	N74LS00N	5322 209 84823
D 2431	INTEGR.CIRCUIT	N74LS139N	5322 209 85839
D 2432	INTEGR.CIRCUIT	SN74LS27N	5322 209 86076
D 2701	INTEGR.CIRCUIT	HEF4052BP	4822 209 10263
D 2702	INTEGR.CIRCUIT	SN74LS123N	5322 209 85266
D 2703	INTEGR.CIRCUIT	CA3086	5322 209 86236
D 2704	INTEGR.CIRCUIT	LM358P	5322 209 82076
D 2706	INTEGR.CIRCUIT	LM308AN	5322 209 86056
D 2707	INTEGR.CIRCUIT	N74LS74AN	4822 209 80782
D 2708	INTEGR.CIRCUIT	LF356N	5322 209 86422
D 2709	INTEGR.CIRCUIT	HEF4052BP	4822 209 10263
D 2711	INTEGR.CIRCUIT	OQ 0012	5322 209 85484
D 2901	INTEGR.CIRCUIT	TL082CP	5322 209 86064
D 2902	INTEGR.CIRCUIT	NE521N	5322 209 14441
D 2903	INTEGR.CIRCUIT	N74LS132N	5322 209 85201
D 2904	INTEGR.CIRCUIT	10231N	5322 209 86003
D 2906	INTEGR.CIRCUIT	10125N	5322 209 86499
D 2907	INTEGR.CIRCUIT	10116N	5322 209 86441
D 2908	INTEGR.CIRCUIT	SN74LS151N	5322 209 86452
D 2909	INTEGR.CIRCUIT	SN74S74N	5322 209 84183
D 2911	INTEGR.CIRCUIT	N74LS04N	4822 209 80783
D 2912	INTEGR.CIRCUIT	N74S00N	5322 209 84167
D 2913	INTEGR.CIRCUIT	LM308AN	5322 209 86056
D 3001	INTEGR.CIRCUIT	TAND H GATE	5322 209 86491
D 3002	INTEGR.CIRCUIT	UA741CN	4822 209 80617
D 3003	INTEGR.CIRCUIT	TL082CP	5322 209 86064
D 3004	INTEGR.CIRCUIT	OQ-0145	5322 209 81324
D 3006	INTEGR.CIRCUIT	TL082CP	5322 209 86064
D 3101	UNIT,ELECTRICAL	BG2000-641/001	5322 218 61001
D 3201	INTEGR.CIRCUIT	LM358N	4822 209 81472
D 3202	INTEGR.CIRCUIT	HEF4052BP	4822 209 10263
D 3203	INTEGR.CIRCUIT	LM358N	4822 209 81472
D 3204	INTEGR.CIRCUIT	LF356N	5322 209 86422
D 3206	INTEGR.CIRCUIT	HEF4051BP	4822 209 10262

POSNR	DESCRIPTION		ORDERING CODE
D 3207	INTEGR.CIRCUIT	MC10H116L	5322 209 81808
D 3208	INTEGR.CIRCUIT	MC10H102L	5322 209 81809
D 3209	INTEGR.CIRCUIT	MC10H131L	5322 209 81811
D 3211	INTEGR.CIRCUIT	MC10H102L	5322 209 81809
D 3212	INTEGR.CIRCUIT	LF356N	5322 209 86422
D 3213	INTEGR.CIRCUIT	LF356N	5322 209 86422
D 3214	INTEGR.CIRCUIT	10125N	5322 209 86499
D 3216	INTEGR.CIRCUIT	10231N	5322 209 86003
D 3217	INTEGR.CIRCUIT	MC10H131L	5322 209 81811
D 3218	INTEGR.CIRCUIT	10124N	5322 209 86341
D 3219	INTEGR.CIRCUIT	LF356N	5322 209 86422
D 3221	INTEGR.CIRCUIT	HEF4052BP	4822 209 10263
D 3222	INTEGR.CIRCUIT	HEF4052BP	4822 209 10263
D 3223	INTEGR.CIRCUIT	LM358P	5322 209 82076
D 3224	INTEGR.CIRCUIT	LM78L05ACZ	5322 209 80903
D 3401	INTEGR.CIRCUIT	RIVER	5322 209 86489
D 3402	INTEGR.CIRCUIT	MC10H116L	5322 209 81808

CRT

POSNR	DESCRIPTION		ORDERING CODE
V 0001	TUBE,ELECTRON	D14-292GH/39	5322 131 24086

Semi Conductors

POSNR	DESCRIPTION		ORDERING CODE
V 0241	DIODE,REFERENCE	BZX79-C5V1	4822 130 34233
V 0242	DIODE,REFERENCE	BZX79-C5V1	4822 130 34233
V 0401	DIODE	BAW62	4822 130 30613
V 0402	DIODE	BAW62	4822 130 30613
V 0601	DIODE	BAW62	4822 130 30613
V 0602	DIODE	BAW62	4822 130 30613
V 0701	DIODE	BAW62	4822 130 30613
V 0901	DIODE	BAW62	4822 130 30613
V 1101	DIODE,REFERENCE	BZX79-C8V2	4822 130 34382
V 1102	DIODE,REFERENCE	BZV13	5322 130 34301
V 1103	TRANSISTOR	BF324	4822 130 41448
V 1104	DIODE,REFERENCE	BZX79-C3V3	5322 130 31504
V 1106	TRANSISTOR	BC558B	4822 130 44197
V 1107	DIODE	BAW62	4822 130 30613
V 1108	TRANSISTOR	BF199	4822 130 44154
V 1109	TRANSISTOR	BC548C	4822 130 44196
V 1111	TRANSISTOR	BC548C	4822 130 44196
V 1112	DIODE	BAW62	4822 130 30613
V 1113	TRANSISTOR	BF199	4822 130 44154
V 1114	DIODE,REFERENCE	BZX79-C9V1	4822 130 30862
V 1116	TRANSISTOR	BC558B	4822 130 44197
V 1117	TRANSISTOR	BF324	4822 130 41448
V 1118	DIODE,REFERENCE	BZX79-C8V2	4822 130 34382
V 1201	DIODE	BAW62	4822 130 30613
V 1301	DIODE	BAW62	4822 130 30613
V 1302	DIODE,REFERENCE	BZX79-C30	4822 130 34328
V 1303	TRANSISTOR	BC558	4822 130 40941
V 1304	TRANSISTOR	BD435	4822 130 40982
V 1501	TRANSISTOR	BD237	4822 130 44235
V 1502	DIODE	BY509	4822 130 41485
V 1503	DIODE	BYV96D	4822 130 31348
V 1504	DIODE	BYV96D	4822 130 31348
V 1506	DIODE	BYV96D	4822 130 31348
V 1507	DIODE	BYV96D	4822 130 31348
V 1508	DIODE	BYV96D	4822 130 31348
V 1509	DIODE	BYV96D	4822 130 31348
V 1511	DIODE	BYW29-150	5322 130 34711
V 1512	DIODE	BYW29-150	5322 130 34711
V 1513	DIODE	BAX12A	5322 130 34605
V 1514	DIODE	BAX12A	5322 130 34605
V 1516	DIODE	BAX12A	5322 130 34605
V 1517	DIODE	BAX12A	5322 130 34605
V 1518	DIODE	BYW29-150	5322 130 34711
V 1519	DIODE	BYW29-150	5322 130 34711
V 1521	DIODE	BYV96E	5322 130 34979
V 1522	DIODE	BYV96E	5322 130 34979
V 1523	TRANSISTOR	BC549C	4822 130 44246
V 1524	TRANSISTOR	BSS38	4822 130 40968
V 1526	TRANSISTOR	BSS38	4822 130 40968
V 1527	THYRISTOR	BRY39	5322 130 40482
V 1528	DIODE	BYV96E	5322 130 34979
V 1529	DIODE	BYV96E	5322 130 34979
V 1531	TRANSISTOR	BC549C	4822 130 44246
V 1532	THYRISTOR	BSS68	5322 130 44247
V 1533	THYRISTOR	BSS68	5322 130 44247
V 1534	DIODE,REFERENCE	BZX79-C4V7	4822 130 34174
V 1536	TRANSISTOR	BSS38	4822 130 40968
V 1537	TRANSISTOR	BSS38	4822 130 40968
V 1538	TRANSISTOR	BC559B	4822 130 44358
V 1539	TRANSISTOR	BC549C	4822 130 44246
V 1541	TRANSISTOR	BC549C	4822 130 44246

POSNR	DESCRIPTION		ORDERING CODE
V 1542	DIODE,REFERENCE	BZX75-C1V4	4822 130 34047
V 1543	DIODE	BAW62	4822 130 30613
V 1544	DIODE,REFERENCE	1N823	5322 130 34405
V 1546	DIODE	BAW62	4822 130 30613
V 1547	TRANSISTOR	BC549C	4822 130 44246
V 1548	DIODE	BYW29-150	5322 130 34711
V 1549	TRANSISTOR	BD237	4822 130 44235
V 1551	THYRISTOR	BT151-500R	5322 130 24081
V 1552	DIODE	BAW62	4822 130 30613
V 1553	TRANSISTOR	BC549C	4822 130 44246
V 1554	DIODE,REFERENCE	BZX79-C47	4822 130 34383
V 1556	DIODE,REFERENCE	BZX79-C47	4822 130 34383
V 1557	DIODE	BYW29-150	5322 130 34711
V 1558	TRANSISTOR	BC559B	4822 130 44358
V 1559	TRANSISTOR	BC549C	4822 130 44246
V 1561	TRANSISTOR	BD237	4822 130 44235
V 1562	DIODE	BYW29-150	5322 130 34711
V 1563	DIODE	BYW29-150	5322 130 34711
V 1564	TRANSISTOR	BC549C	4822 130 44246
V 1601	DIODE	BYV96E	5322 130 34979
V 1602	DIODE	BY224-600	5322 130 34761
V 1603	DIODE	BAX12A	5322 130 34605
V 1604	DIODE	BAX12A	5322 130 34605
V 1606	DIODE	BAX12A	5322 130 34605
V 1607	DIODE	BAX12A	5322 130 34605
V 1608	DIODE	BYV96E	5322 130 34979
V 1609	DIODE	BYV96E	5322 130 34979
V 1611	DIODE	BZX79-C12	4822 130 34197
V 1612	DIODE	BZX79-C12	4822 130 34197
V 1613	DIODE	BZX79-C12	4822 130 34197
V 1614	DIODE	BAW62	4822 130 30613
V 1616	TRANSISTOR	BC547B	4822 130 40959
V 1617	DIODE	BAX12A	5322 130 34605
V 1618	TRANSISTOR	BUY89	5322 130 41954
V 1619	DIODE	BAW62	4822 130 30613
V 1621	TRANSISTOR	BUX86	5322 130 44718
V 1622	TRANSISTOR	BC549C	4822 130 44246
V 2001	TRANSISTOR	BC547B	4822 130 40959
V 2002	DIODE	HSCH-1001	4822 130 31689
V 2003	DIODE	HSCH-1001	4822 130 31689
V 2004	DIODE	BAW62	4822 130 30613
V 2006	TRANSISTOR	BC556	4822 130 40989
V 2007	DIODE	BF423	4822 130 41646
V 2008	DIODE	HSCH-1001	4822 130 31689
V 2009	DIODE	HSCH-1001	4822 130 31689
V 2011	DIODE	BAW62	4822 130 30613
V 2012	DIODE	BAW62	4822 130 30613
V 2013	TRANSISTOR	BC556	4822 130 40989
V 2014	DIODE	BAV21	4822 130 30842
V 2016	TRANSISTOR	BF422	4822 130 41782
V 2017	DIODE,REFERENCE	BZX79-B6V2	4822 130 34167
V 2018	DIODE,REFERENCE	BZX79-C10	4822 130 34297
V 2019	DIODE	BAW62	4822 130 30613
V 2021	TRANSISTOR	BC547B	4822 130 40959
V 2022	DIODE,REFERENCE	BZX79-B6V2	4822 130 34167
V 2023	TRANSISTOR	BF422	4822 130 41782
V 2024	DIODE	BAW62	4822 130 30613
V 2026	DIODE,REFERENCE	BZX79-C10	4822 130 34297
V 2027	DIODE	BAW62	4822 130 30613
V 2028	TRANSISTOR	BC549C	4822 130 44246

POSNR	DESCRIPTION		ORDERING CODE
V 2029	DIODE,REFERENCE	BZX79-B6V8	4822 130 34278
V 2031	DIODE	BAV21	4822 130 30842
V 2032	DIODE	BF423	4822 130 41646
V 2033	TRANSISTOR	BC549C	4822 130 44246
V 2034	TRANSISTOR	BC549C	4822 130 44246
V 2036	DIODE,REFERENCE	BZX79-C6V8	4822 130 34278
V 2037	DIODE,REFERENCE	BZX79-C6V8	4822 130 34278
V 2038	TRANSISTOR	BC549C	4822 130 44246
V 2039	DIODE,REFERENCE	BZX79-C6V8	4822 130 34278
V 2041	DIODE,REFERENCE	BZX79-C6V8	4822 130 34278
V 2042	DIODE,REFERENCE	BZX79-C6V8	4822 130 34278
V 2043	DIODE,REFERENCE	BZX79-C6V8	4822 130 34278
V 2400	DIODE	BAW62	4822 130 30613
V 2401	TRANSISTOR,FET	BSV80	5322 130 34044
V 2402	DIODE	BAW62	4822 130 30613
V 2403	DIODE	BAW62	4822 130 30613
V 2404	DIODE	BAW62	4822 130 30613
V 2405	DIODE	BAW62	4822 130 30613
V 2406	TRANSISTOR	BFW30	5322 130 40379
V 2407	TRANSISTOR,FET	BC264A	5322 130 44476
V 2408	TRANSISTOR	BC549C	4822 130 44246
V 2409	DIODE	BAW62	4822 130 30613
V 2410	DIODE	BAW62	4822 130 30613
V 2411	DIODE	BAW62	4822 130 30613
V 2412	DIODE	BAV45	5322 130 34037
V 2413	TRANSISTOR	BC549C	4822 130 44246
V 2414	TRANSISTOR	BC559B	4822 130 44358
V 2415	TRANSISTOR	BC549C	4822 130 44246
V 2416	TRANSISTOR	BC559B	4822 130 44358
V 2417	TRANSISTOR	BC559B	4822 130 44358
V 2418	TRANSISTOR	BF324	4822 130 41448
V 2419	TRANSISTOR	BF324	4822 130 41448
V 2420	TRANSISTOR	BC549C	4822 130 44246
V 2421	DIODE	BAW62	4822 130 30613
V 2422	TRANSISTOR	BC549C	4822 130 44246
V 2423	DIODE	BAW62	4822 130 30613
V 2424	TRANSISTOR	BF324	4822 130 41448
V 2425	DIODE,REFERENCE	BZX79-C9V1	4822 130 30862
V 2426	TRANSISTOR	BF324	4822 130 41448
V 2427	DIODE	BAW62	4822 130 30613
V 2428	TRANSISTOR	BC559B	4822 130 44358
V 2429	TRANSISTOR	BC549C	4822 130 44246
V 2430	DIODE,REFERENCE	BZX79-C9V1	4822 130 30862
V 2432	TRANSISTOR	BC549C	4822 130 44246
V 2433	TRANSISTOR	BC559B	4822 130 44358
V 2434	DIODE,REFERENCE	BZX75-C1V4	4822 130 34047
V 2436	TRANSISTOR	BC549C	4822 130 44246
V 2437	DIODE	BAW62	4822 130 30613
V 2438	TRANSISTOR	BC549C	4822 130 44246
V 2439	TRANSISTOR	BC549C	4822 130 44246
V 2441	TRANSISTOR	BC549C	4822 130 44246
V 2442	TRANSISTOR	BC549C	4822 130 44246
V 2443	TRANSISTOR	BC549C	4822 130 44246
V 2444	TRANSISTOR	BC559B	4822 130 44358
V 2446	DIODE	BAW62	4822 130 30613
V 2448	TRANSISTOR	BFW30	5322 130 40379
V 2449	TRANSISTOR	BC559B	4822 130 44358
V 2450	TRANSISTOR	BC549C	4822 130 44246
V 2451	TRANSISTOR,FET	BC264A	5322 130 44476
V 2452	DIODE	BAW62	4822 130 30613
V 2453	DIODE	BAW62	4822 130 30613
V 2454	DIODE	BAV45	5322 130 34037
V 2456	TRANSISTOR	BC559B	4822 130 44358
V 2457	TRANSISTOR	BC559B	4822 130 44358
V 2458	DIODE	BAW62	4822 130 30613

POSNR	DESCRIPTION		ORDERING CODE
V 2459	TRANSISTOR	BC559B	4822 130 44358
V 2461	DIODE	BAW62	4822 130 30613
V 2462	TRANSISTOR	BF324	4822 130 41448
V 2463	DIODE	BAW62	4822 130 30613
V 2464	TRANSISTOR	BC549C	4822 130 44246
V 2466	TRANSISTOR	BF324	4822 130 41448
V 2467	DIODE	BAW62	4822 130 30613
V 2468	TRANSISTOR	BC559B	4822 130 44358
V 2469	TRANSISTOR	BC549C	4822 130 44246
V 2471	TRANSISTOR	BC549C	4822 130 44246
V 2473	TRANSISTOR	BC549C	4822 130 44246
V 2474	TRANSISTOR	BC559B	4822 130 44358
V 2476	TRANSISTOR	BC549C	4822 130 44246
V 2477	DIODE	BAW62	4822 130 30613
V 2478	DIODE,REFERENCE	BZX75-C2V1	4822 130 34049
V 2479	DIODE,REFERENCE	BZX75-C2V8	4822 130 34048
V 2480	DIODE,REFERENCE	BZX79-C9V1	4822 130 30862
V 2481	DIODE	BAW62	4822 130 30613
V 2483	DIODE	BAW62	4822 130 30613
V 2484	DIODE	BAW62	4822 130 30613
V 2485	DIODE,REFERENCE	BZX75-C1V4	4822 130 34047
V 2486	DIODE	BAW62	4822 130 30613
V 2487	DIODE	BAW62	4822 130 30613
V 2701	TRANSISTOR,FET	BC264A	5322 130 44476
V 2702	TRANSISTOR	BFY90	4822 130 40493
V 2703	TRANSISTOR	BC559B	4822 130 44358
V 2704	DIODE	BAW62	4822 130 30613
V 2706	DIODE	BAW62	4822 130 30613
V 2707	TRANSISTOR	BF324	4822 130 41448
V 2708	TRANSISTOR	BC549C	4822 130 44246
V 2709	DIODE	BAW62	4822 130 30613
V 2711	TRANSISTOR	BF324	4822 130 41448
V 2712	TRANSISTOR	BC549C	4822 130 44246
V 2713	DIODE	BAW62	4822 130 30613
V 2714	DIODE	BAW62	4822 130 30613
V 2716	DIODE	BAW62	4822 130 30613
V 2717	TRANSISTOR	BC549C	4822 130 44246
V 2718	TRANSISTOR	BC549C	4822 130 44246
V 2719	DIODE	BAW62	4822 130 30613
V 2721	DIODE	BAW62	4822 130 30613
V 2722	DIODE	BAW62	4822 130 30613
V 2723	TRANSISTOR	BC559B	4822 130 44358
V 2724	TRANSISTOR	BC549C	4822 130 44246
V 2726	TRANSISTOR	BF199	4822 130 44154
V 2727	TRANSISTOR	BC549C	4822 130 44246
V 2728	TRANSISTOR	BC559B	4822 130 44358
V 2729	TRANSISTOR	BC549C	4822 130 44246
V 2731	TRANSISTOR	BF199	4822 130 44154
V 2732	TRANSISTOR	BC549C	4822 130 44246
V 2733	TRANSISTOR	BF450	4822 130 44237
V 2734	DIODE	BAW62	4822 130 30613
V 2736	TRANSISTOR	BC549C	4822 130 44246
V 2737	TRANSISTOR	BC549C	4822 130 44246
V 2738	DIODE	BAW62	4822 130 30613
V 2739	DIODE	BAW62	4822 130 30613
V 2741	TRANSISTOR	BC549C	4822 130 44246
V 2742	TRANSISTOR	BC549C	4822 130 44246
V 2743	DIODE	BAW62	4822 130 30613
V 2744	DIODE	BAW62	4822 130 30613
V 2746	TRANSISTOR	BC549C	4822 130 44246
V 2747	TRANSISTOR	BC549C	4822 130 44246
V 2748	DIODE	BAW62	4822 130 30613
V 2749	TRANSISTOR	BF450	4822 130 44237
V 2751	TRANSISTOR	BC549C	4822 130 44246
V 2752	DIODE,REFERENCE	BZX75-C2V1	4822 130 34049

1.2.2.9. IEC 625-1 bus interface unit A14 (PM3325).

Item	Ordering number	Description			
		CAPACITORS			
C 1401	4822 122 31414	CAPACITOR,CERAM	10NF		100V
C 1402	4822 122 31414	CAPACITOR,CERAM	10NF		100V
C 1403	4822 122 31414	CAPACITOR,CERAM	10NF		100V
C 1404	4822 122 31414	CAPACITOR,CERAM	10NF		100V
C 1406	4822 122 31414	CAPACITOR,CERAM	10NF		100V
C 1407	4822 122 31173	CAPACITOR,CERAM	220PF	10%	500V
C 1408	4822 122 31414	CAPACITOR,CERAM	10NF		100V
C 1409	4822 122 31414	CAPACITOR,CERAM	10NF		100V
C 1411	4822 122 31414	CAPACITOR,CERAM	10NF		100V
C 1412	4822 122 31414	CAPACITOR,CERAM	10NF		100V
C 1413	4822 122 31414	CAPACITOR,CERAM	10NF		100V
C 1414	4822 122 31414	CAPACITOR,CERAM	10NF		100V
C 1416	4822 122 31414	CAPACITOR,CERAM	10NF		100V
C 1417	4822 122 31414	CAPACITOR,CERAM	10NF		100V
C 1418	4822 122 31054	CAPACITOR,CERAM	10PF	2%	100V
C 1419	4822 122 31054	CAPACITOR,CERAM	10PF	2%	100V
C 1421	4822 122 31054	CAPACITOR,CERAM	10PF	2%	100V
C 1422	4822 122 31414	CAPACITOR,CERAM	10NF		100V
C 1423	4822 122 31414	CAPACITOR,CERAM	10NF		100V
C 1424	4822 122 31414	CAPACITOR,CERAM	10NF		100V
C 1426	4822 122 31414	CAPACITOR,CERAM	10NF		100V
C 1427	4822 122 31414	CAPACITOR,CERAM	10NF		100V
C 1428	4822 122 31414	CAPACITOR,CERAM	10NF		100V
C 1429	4822 122 31414	CAPACITOR,CERAM	10NF		100V
C 1431	4822 122 31414	CAPACITOR,CERAM	10NF		100V
C 1432	4822 122 31414	CAPACITOR,CERAM	10NF		100V
C 1433	4822 122 31414	CAPACITOR,CERAM	10NF		100V
C 1434	4822 122 31414	CAPACITOR,CERAM	10NF		100V
C 1436	4822 122 31173	CAPACITOR,CERAM	220PF	10%	500V
C 1437	4822 124 20699	CAP,ELECTROLYT	47UF	50%	25V
		RESISTORS			
R 1401	5322 116 50608	RESISTOR,M.FILM	6K19	1%	0,4W
R 1402	5322 116 50608	RESISTOR,M.FILM	6K19	1%	0,4W
R 1403	5322 116 50608	RESISTOR,M.FILM	6K19	1%	0,4W
R 1404	5322 116 50608	RESISTOR,M.FILM	6K19	1%	0,4W

Item	Ordering number	Description
	INTEGRATED CIRCUITS	
D 1401	5322 209 84823	INTEGR.CIRCUIT N74LS00N
D 1402	5322 209 84996	INTEGR.CIRCUIT SN74LS10N
D 1403	5322 209 85311	INTEGR.CIRCUIT N74LS32A
D 1404	5322 209 84995	INTEGR.CIRCUIT SN74LS08N
D 1406	5322 209 85464	INTEGR.CIRCUIT MC3441P
D 1407	5322 209 85464	INTEGR.CIRCUIT MC3441P
D 1408	5322 209 14509	INTEGR.CIRCUIT HEF4738VP
D 1409	5322 209 85266	INTEGR.CIRCUIT SN74LS123N
D 1411	5322 209 85312	INTEGR.CIRCUIT N74LS02A
D 1412	5322 209 85266	INTEGR.CIRCUIT SN74LS123N
D 1413	5322 209 85562	INTEGR.CIRCUIT
D 1414	5322 209 85752	INTEGR.CIRCUIT N74LS155N
D 1416	5322 209 85464	INTEGR.CIRCUIT MC3441P
D 1417	5322 209 85464	INTEGR.CIRCUIT MC3441P
D 1418	5322 209 84997	INTEGR.CIRCUIT SN74LS86N
D 1419	5322 209 85346	INTEGR.CIRCUIT SN74LS279N
D 1421	5322 209 84823	INTEGR.CIRCUIT N74LS00N
D 1422	5322 209 84823	INTEGR.CIRCUIT N74LS00N
D 1423	5322 209 86017	INTEGR.CIRCUIT SN74LS244N
D 1424	5322 209 86062	INTEGR.CIRCUIT
D 1426	5322 209 86062	INTEGR.CIRCUIT
D 1427	5322 209 86062	INTEGR.CIRCUIT
D 1428	5322 209 86017	INTEGR.CIRCUIT SN74LS244N
D 1429	5322 209 14219	INTEGR.CIRCUIT HEF4014BP
D 1431	5322 209 14219	INTEGR.CIRCUIT HEF4014BP
		MISCELLANEOUS
S 1401	5322 277 24045	SWITCH
S 1402	5322 277 24045	SWITCH
S 1403	5322 277 24045	SWITCH
S 1404	5322 277 24045	SWITCH
S 1405	5322 277 24045	SWITCH
S 1406	5322 277 24045	SWITCH
S 1407	5322 277 24053	SWITCH,SLIDE
X 1401	5322 265 64082	SOCKET,MALE
A80	5322 321 20474	CABLE,CONNECT.
	5322 500 10265	NUT

1.2.2.10. Trigger control unit A5

POSNR	DESCRIPTION		ORDERING CODE
	KER BUIS		5322 532 50899
C 0501	-20+50%	10NF	4822 122 31414
C 0502	-20+50%	10NF	4822 122 31414
C 0503	-20+50%	10NF	4822 122 31414
C 0504	-20+50%	10NF	4822 122 31414
C 0506	-20+50%	10NF	4822 122 31414
C 0507	-20+50%	10NF	4822 122 31414
C 0511	-20+50%	10NF	4822 122 31414
C 0512	-20+50%	10NF	4822 122 31414
C 0513	-20+50%	10NF	4822 122 31414
C 0518	-20+50%	10NF	4822 122 31414
C 0523	-20+50%	10NF	4822 122 31414
C 0524	-20+50%	10NF	4822 122 31414
C 0526	-20+50%	10NF	4822 122 31414
C 0527	-20+50%	10NF	4822 122 31414
C 0528	-20+50%	10NF	4822 122 31414
C 0529	-20+50%	10NF	4822 122 31414
C 0531	-20+50%	10NF	4822 122 31414
C 0532	-20+50%	10NF	4822 122 31414
C 0533	-20+50%	1NF	4822 122 30027
C 0534	100V 5%	100NF	5322 121 40323
C 0536	10V 20%	33UF	4822 124 20945
C 0537	10V 20%	6.8UF	5322 124 24115
C 0538	10V 20%	6.8UF	5322 124 24115
C 0539	10V 20%	6.8UF	5322 124 24115
C 0542	-20+50%	10NF	4822 122 31414
C 0543	-20+50%	10NF	4822 122 31414
C 0544	-20+50%	10NF	4822 122 31414
C 0546	-20+50%	10NF	4822 122 31414
C 0547	-20+50%	10NF	4822 122 31414
C 0548	-20+50%	10NF	4822 122 31414
C 0549	-20+50%	10NF	4822 122 31414
C 0551	-20+50%	10NF	4822 122 31414
C 0552	-20+50%	10NF	4822 122 31414
D 0501	SN74LS74AN	T.I	4822 209 80782
D 0502	N74LS191N	SIG	5322 209 84989
D 0503	N74LS191N	SIG	5322 209 84989
D 0504	N74LS191N	SIG	5322 209 84989
D 0506	N74LS244N	SIG	5322 209 86017
D 0507	N74LS244N	SIG	5322 209 86017
D 0508	N74LS244N	SIG	5322 209 86017
D 0509	N74LS244N	SIG	5322 209 86017
D 0511	SN74LS374N	T.I	5322 209 85869
D 0512	SN74LS374N	T.I	5322 209 85869
D 0513	N74LS139N	SIG	5322 209 85839
D 0514	N74LS00N	SIG	5322 209 84823
D 0516	N74LS32N	SIG	5322 209 85311
D 0517	SN74LS257N	T.I	5322 209 86392
D 0518	SN74LS257N	T.I	5322 209 86392
D 0519	AD7541JN	AND	5322 209 86245
K 0501	RI-22/3A	PH	5322 280 24126
K 0501			5322 281 60156
K 0501	RI-22/3A	PH	5322 280 24126
K 0501			5322 281 60156
K 0501	RI-22/3A	PH	5322 280 24126
K 0501			5322 281 60156
K 0501	RI-22/3A	PH	5322 280 24126
K 0501			5322 281 60156
N 0521	LM339AN	N.S	4822 209 80631
N 0522	LM358N	SIG	4822 209 81472
N 0523	TL082CP	T.I	5322 209 86064

POSNR	DESCRIPTION			ORDERING CODE
R 0501	MR25	1%	8K25	5322 116 54558
R 0502	MR25	1%	8K25	5322 116 54558
R 0503	MR25	1%	8K25	5322 116 54558
R 0504	MR25	1%	11K	5322 116 54623
R 0506	MR25	1%	511E	4822 116 51282
R 0507	MR25	1%	10K	4822 116 51253
R 0508	MR25	1%	10K	4822 116 51253
R 0509	MR25	1%	10K	4822 116 51253
R 0514	MR25	1%	100K	4822 116 51268
R 0516	MR25	1%	90K9	5322 116 54694
R 0517	MR25	1%	100K	4822 116 51268
R 0518	MR25	1%	90K9	5322 116 54694
R 0519	MR25	1%	100K	4822 116 51268
R 0521	MR25	1%	10K	4822 116 51253
R 0522	MR25	1%	10K	4822 116 51253
R 0523	MR25	1%	10K	4822 116 51253
R 0526	MR25	1%	10K	4822 116 51253
R 0527	MR25	1%	10K	4822 116 51253
R 0528	MR25	1%	10K	4822 116 51253
R 0529	MR25	1%	10K	4822 116 51253
R 0531	MR25	1%	10K	4822 116 51253
R 0532	MR25	1%	10K	4822 116 51253
R 0533	MR25	1%	10K	4822 116 51253
R 0534	MR25	1%	10K	4822 116 51253
R 0536	MR25	1%	10K	4822 116 51253
R 0541	MTP10	20%	22K	5322 100 10118
R 0542	MTP10	20%	22K	5322 100 10118
R 0543	MTP10	20%	4K7	5322 101 14067
R 0544	MTP10	20%	1K	5322 101 10294
R 0546	MR25	1%	5K62	4822 116 51281
R 0547	MR25	1%	5K62	4822 116 51281
R 0548	MR25	1%	5K62	4822 116 51281
R 0549	MR25	1%	5K62	4822 116 51281
R 0551	MR25	1%	196E	5322 116 55273
R 0552	MR25	1%	51K1	5322 116 50672
R 0553	MTP10	20%	100K	5322 100 10116
V 0501	BAW62		PEL	4822 130 30613
V 0502	BAW62		PEL	4822 130 30613
V 0503	BAW62		PEL	4822 130 30613
V 0504	BAW62		PEL	4822 130 30613
V 0506	BAT83		PEL	5322 130 32103
X 0501	64-P PEN		2.54	5322 265 61025
X 0502	10-P ZY		2.50	5322 267 64027
X 0503	10-P ZY		2.50	5322 267 64027
X 0504	8-P ZY		2.50	5322 267 64027

1.2.2.9. IEC 625-1 bus interface unit A14 (PM3325).

Item	Ordering number	Description			
		CAPACITORS			
C 1401	4822 122 31414	CAPACITOR,CERAM	10NF		100V
C 1402	4822 122 31414	CAPACITOR,CERAM	10NF		100V
C 1403	4822 122 31414	CAPACITOR,CERAM	10NF		100V
C 1404	4822 122 31414	CAPACITOR,CERAM	10NF		100V
C 1406	4822 122 31414	CAPACITOR,CERAM	10NF		100V
C 1407	4822 122 31173	CAPACITOR,CERAM	220PF	10%	500V
C 1408	4822 122 31414	CAPACITOR,CERAM	10NF		100V
C 1409	4822 122 31414	CAPACITOR,CERAM	10NF		100V
C 1411	4822 122 31414	CAPACITOR,CERAM	10NF		100V
C 1412	4822 122 31414	CAPACITOR,CERAM	10NF		100V
C 1413	4822 122 31414	CAPACITOR,CERAM	10NF		100V
C 1414	4822 122 31414	CAPACITOR,CERAM	10NF		100V
C 1416	4822 122 31414	CAPACITOR,CERAM	10NF		100V
C 1417	4822 122 31414	CAPACITOR,CERAM	10NF		100V
C 1418	4822 122 31054	CAPACITOR,CERAM	10PF	2%	100V
C 1419	4822 122 31054	CAPACITOR,CERAM	10PF	2%	100V
C 1421	4822 122 31054	CAPACITOR,CERAM	10PF	2%	100V
C 1422	4822 122 31414	CAPACITOR,CERAM	10NF		100V
C 1423	4822 122 31414	CAPACITOR,CERAM	10NF		100V
C 1424	4822 122 31414	CAPACITOR,CERAM	10NF		100V
C 1426	4822 122 31414	CAPACITOR,CERAM	10NF		100V
C 1427	4822 122 31414	CAPACITOR,CERAM	10NF		100V
C 1428	4822 122 31414	CAPACITOR,CERAM	10NF		100V
C 1429	4822 122 31414	CAPACITOR,CERAM	10NF		100V
C 1431	4822 122 31414	CAPACITOR,CERAM	10NF		100V
C 1432	4822 122 31414	CAPACITOR,CERAM	10NF		100V
C 1433	4822 122 31414	CAPACITOR,CERAM	10NF		100V
C 1434	4822 122 31414	CAPACITOR,CERAM	10NF		100V
C 1436	4822 122 31173	CAPACITOR,CERAM	220PF	10%	500V
C 1437	4822 124 20699	CAP,ELECTROLYT.	47UF	50%	25V
		RESISTORS			
R 1401	5322 116 50608	RESISTOR,M.FILM	6K19	1%	0,4W
R 1402	5322 116 50608	RESISTOR,M.FILM	6K19	1%	0,4W
R 1403	5322 116 50608	RESISTOR,M.FILM	6K19	1%	0,4W
R 1404	5322 116 50608	RESISTOR,M.FILM	6K19	1%	0,4W

Item	Ordering number	Description
	INTEGRATED CIRCUITS	
D 1401	5322 209 84823	INTEGR.CIRCUIT N74LS00N
D 1402	5322 209 84996	INTEGR.CIRCUIT SN74LS10N
D 1403	5322 209 85311	INTEGR.CIRCUIT N74LS32A
D 1404	5322 209 84995	INTEGR.CIRCUIT SN74LS08N
D 1406	5322 209 85464	INTEGR.CIRCUIT MC3441P
D 1407	5322 209 85464	INTEGR.CIRCUIT MC3441P
D 1408	5322 209 14509	INTEGR.CIRCUIT HEF4738VP
D 1409	5322 209 85266	INTEGR.CIRCUIT SN74LS123N
D 1411	5322 209 85312	INTEGR.CIRCUIT N74LS02A
D 1412	5322 209 85266	INTEGR.CIRCUIT SN74LS123N
D 1413	5322 209 85562	INTEGR.CIRCUIT
D 1414	5322 209 85752	INTEGR.CIRCUIT N74LS155N
D 1416	5322 209 85464	INTEGR.CIRCUIT MC3441P
D 1417	5322 209 85464	INTEGR.CIRCUIT MC3441P
D 1418	5322 209 84997	INTEGR.CIRCUIT SN74LS86N
D 1419	5322 209 85346	INTEGR.CIRCUIT SN74LS279N
D 1421	5322 209 84823	INTEGR.CIRCUIT N74LS00N
D 1422	5322 209 84823	INTEGR.CIRCUIT N74LS00N
D 1423	5322 209 86017	INTEGR.CIRCUIT SN74LS244N
D 1424	5322 209 86062	INTEGR.CIRCUIT
D 1426	5322 209 86062	INTEGR.CIRCUIT
D 1427	5322 209 86062	INTEGR.CIRCUIT
D 1428	5322 209 86017	INTEGR.CIRCUIT SN74LS244N
D 1429	5322 209 14219	INTEGR.CIRCUIT HEF4014BP
D 1431	5322 209 14219	INTEGR.CIRCUIT HEF4014BP
		MISCELLANEOUS
S 1401	5322 277 24045	SWITCH
S 1402	5322 277 24045	SWITCH
S 1403	5322 277 24045	SWITCH
S 1404	5322 277 24045	SWITCH
S 1405	5322 277 24045	SWITCH
S 1406	5322 277 24045	SWITCH
S 1407	5322 277 24053	SWITCH,SLIDE
X 1401	5322 265 64082	SOCKET,MALE
A80	5322 321 20474	CABLE,CONNECT.
D407	5322 209 10151	INTEGR.CIRCUIT
	5322 500 10265	NUT

13. ADDITIONAL DIAGRAMS

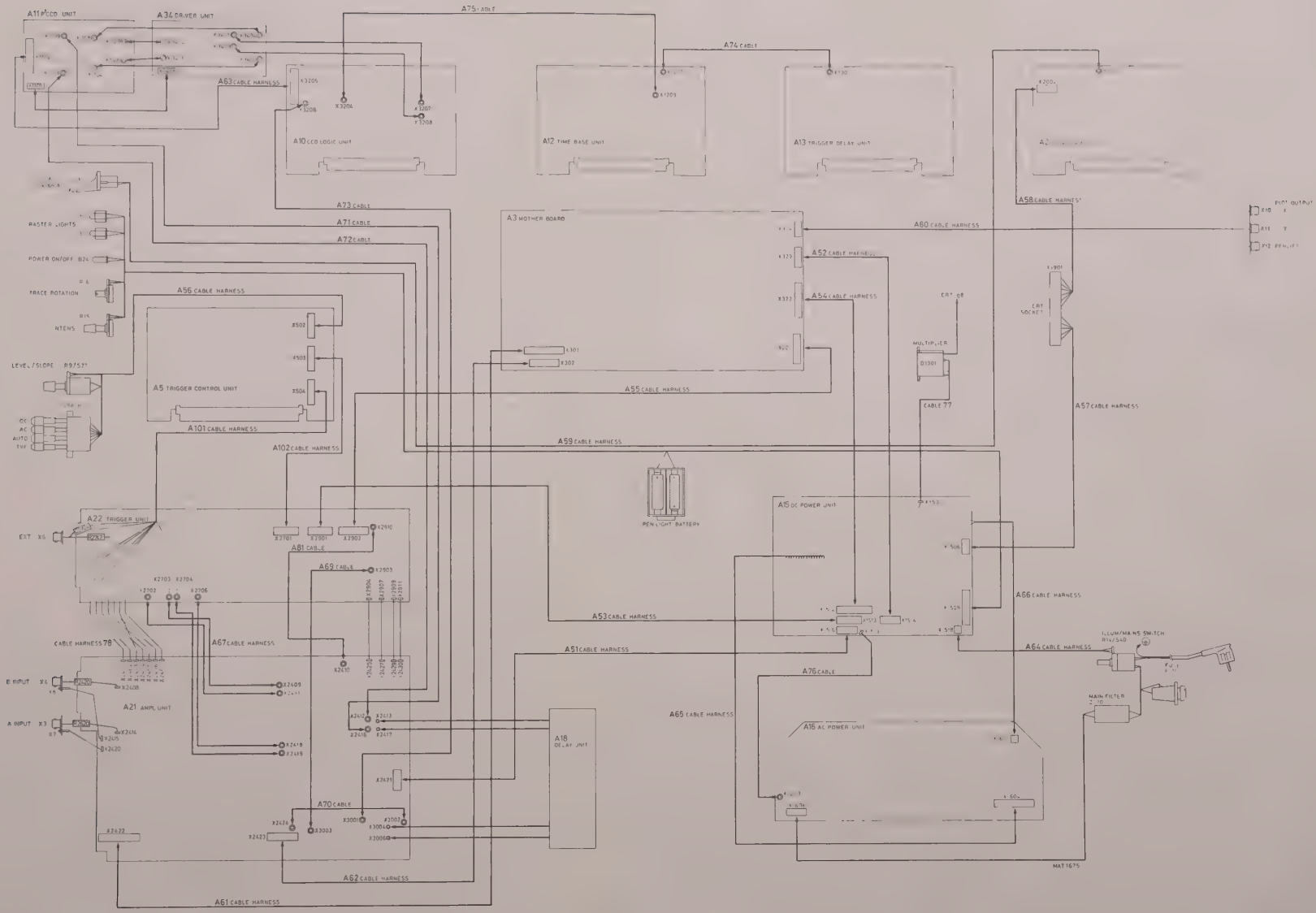

Fig. 13.1.1. Wiring diagram

CODING SYSTEM OF FAILURE REPORTING FOR QUALITY ASSESSMENT OF T & M INSTRUMENTS

(excl. potentiometric recorders)

The information contents of the coded failure description is necessary for our computerized processing of quality data.

Since the reporting of repair and maintenance routines must be complete and exact, we give you an example of a correctly filled-out PHILIPS SERVICE Job sheet.

① Country	② Day Month Year	③ Typenumber /Version	④ Factory/Serial no.
3 2	1 5 0 4 7 5	0 P M 3 2 6 0 0 2	D O 0 0 7 8 3

CODED FAILURE DESCRIPTION ⑥

⑤ Nature of call	Location	Component/sequence no.	Category
☐ Installation		T S 0 6 0 7	5
☐ Pre sale repair		R 0 0 6 3 1	2
☐ Preventive maintenance	0 0 2 1	9 9 0 0 0 1	4
☒ Corrective maintenance			
☐ Other			

⑦ *Job completed* ☒

Working time ⑧ ☐☐12 Hrs

Detailed description of the information to be entered in the various boxes:

①Country: 3 2 = Switzerland

②Day Month Year 1 5 0 4 7 5 = 15 April 1975

③Type number/Version O P M 3 2 6 0 0 2 = Oscilloscope PM 3260, version 02 (in later oscilloscopes this number is placed in front of the serial no)

④Factory/Serial number D O 0 0 7 8 3 = DO 783 These data are mentioned on the type plate of the instrument

⑤ Nature of call: Enter a cross in the relevant box

⑥ Coded failure description

Location

☐☐☐☐

These four boxes are used to isolate the problem area. Write the code of the part in which the fault occurs, e.g. unit no or mechanical item no of this part (refer to 'PARTS LISTS' in the manual).

Example: 0001 for Unit 1
000A for Unit A
0075 for item 75

If units are not numbered, do not fill in the four boxes; see Example Job sheet.

Component/sequence no.

☐☐☐☐☐☐

These six boxes are intended to pinpoint the faulty component.

A. Enter the component designation as used in the circuit diagram. If the designation is alfa-numeric, the letters must be written (starting from the left) in the two left-hand boxes and the figures must be written (in such a way that the last digit occupies the right-most box) in the four right-hand boxes.

B. Parts not identified in the circuit diagram:

990000 Unknown/Not applicable
990001 Cabinet or rack (text plate, emblem, grip, rail, graticule, etc.)
990002 Knob (incl. dial knob, cap, etc.)
990003 Probe (only if attached to instrument)
990004 Leads and associated plugs
990005 Holder (valve, transistor, fuse, board, etc.)
990006 Complete unit (p.w. board, h.t. unit, etc.)
990007 Accessory (only those without type number)
990008 Documentation (manual, supplement, etc.)
990009 Foreign object
990099 Miscellaneous

Category

☐

0 Unknown, not applicable (fault not present, intermittent or disappeared)
1 Software error
2 Readjustment
3 Electrical repair (wiring, solder joint, etc.)
4 Mechanical repair (polishing, filing, remachining, etc.)
5 Replacement (of transistor, resistor, etc.)
6 Cleaning and/or lubrication
7 Operator error
8 Missing items (on pre-sale test)
9 Environmental requirements are not met

⑦ Job completed: Enter a cross when the job has been completed.

⑧ Working time: Enter the total number of working hours spent in connection with the job (excluding travelling, waiting time, etc.), using the last box for tenths of hours.

☐☐12 = 1,2 working hours (1 h 12 min.)

Sales and service all over the world

Alger: Bureau de Liaison Philips,
24 bis, Rue Bougainville,
El Mouradia, Alger; tel.: 213-565672

Argentina: Philips Argentina S.A.,
Cassila de Correo 3479, (Central), 1430 Buenos Aires;
tel. 54-1-5422411/5422512/5422613

Australia: Philips Scientific & Industrial
Equipment Division, Centre Court,
25 - 27 Paul Street, P.O. Box 119,
North Ryde/NSW 2113; tel. 61-2-8888222

Bangla Desh: Philips Bangla Desh Ltd.,
16/17 Kawran Bazar,
P.O. Box 62; Ramna, Dacca; tel. 325081/5

België/Belgique: Philips & MBLE associated S.A.,
Scientific and Industrial Equipment Division,
80 Rue des Deux Gares, 1070 Bruxelles
tel. 32-2-5230000

Bolivia: Industrias Bolivianas Philips S.A.,
Calle Loayza 217,
Cajón Postal 2964, La Paz;
tel.: 341453/350029

Brasil: Philips do Brasil Ltda,
Avenida 9 de Julho 5229, Caixa Postal 8681,
CEP 01407 - Sao Paulo (S.P.);
tel. 55-11-2821611
Service Centre:
Sistemas Profissionais
Rua Amador Bueno, 474,
Caixa Postal 3159 - S. Amaro,
CEP 04752 - Sto Amaro (S.P.);
tel. 55-11-2476522

Canada: Philips Electronics Ltd.
601 Milner Avenue
Scarborough (Ontario) M1B IM8
tel. 1-416-2925161

Chile: Philips Chiléna S.A.,
Division Professional, Avda. Santa Maria 0760,
Casilla Postal 2687, Santiago de Chile, tel. 770038

Colombia: Industrias Philips de Columbia S.A.,
Calle 13 no. 51–39, Apartado Aereo 4282,
Bogota, tel. 2600600

Danmark: Philips Elektronik-Systemer A/S,
Afd. for Industri og Forskning, Strandlodsvej 4,
P.O. Box 1919, 2300 København S;
tel. 45-1-572222

Deutschland (Bundesrepublik): Philips GmbH,
Unternehmensbereich Elektronik für
Wissenschaft und Industrie, Miramstrasse 87,
Postfach 310 320, 3500 Kassel-Bettenhausen;
tel. 49-561-5010

Ecuador: Philips Ecuador C.A.,
Casilla 4607, Guayaquil; tel. 593-4-396100/397294 (comm.)
Casilla 343, Quito; tel. 593-2-239080 (service)

Egypt: Resident Delegate Office Philips Industries,
5 Sheriff el Saghir Street, Corner Eloui, P.O. Box 1687, Cairo;
tel. 20-2-754118/772459/754077

Eire: Philips Electrical (Ireland) Ltd.,
Newstead, Clonskeagh, Dublin 14; tel. 353-1-693355

España: Philips Ibérica S.A.E.,
Dpto Aparatos de Medida, Martinez Villergas 2,
Apartado 2065, Madrid 27;
tel. 34-1-4042200/4043200/4044200
Service Centre:
Dpto Tco. de Instrumentación,
Calle de Albasanz 75, Madrid 17;
tel. 34-1-2045940/2047025/2047105

Ethiopia: Philips Ethiopia (Priv. Ltd. Co.),
Ras Abebe Areguay Avenua,
P.O.B. 2565,
Addis Ababa; tel. 448300

Finland: See Suomi

France: S.A. Philips Industrielle et Commerciale,
Science et Industrie,
105 Rue de Paris, B.P.62, 93 002 Bobigny Cedex
tel. 33-1-8301111

Greece: See Hellas

Hellas: Philips S.A. Hellénique,
54 Avenue Syngrou, P.O. Box 3153,
10210 Athens; tel. 30-1-9215311

Hong Kong: Philips Hong Kong Ltd.,
29/F Hopewell Centre,
17, Kennedy Road, G.P.O. Box 2108,
Hong Kong;
tel. 852-5-283298

India: Peico Electronics & Electricals Ltd.,
S&I Equipment, Shivsagar Estate,
Block "A", Dr. Annie Besant Road,
P.O.B. 6598, Worli, Bombay 400 018 (WB);
tel. 91-22-391431/897671

Indonesia: P.T. Philips Development Corporation,
Department for Science and Industry Wisma PeDe,
Jalan Let. Jen. M.T. Haryono Kav. 17,
P.O.B. 2287, Jakarta tel. 62-21-820808

Iran: Philips Iran Ltd., P.O.B. 1297, Teheran;
tel. 98-21-674138/675158

Iraq: Philips Midden Oosten B.V., Baghdad Branch,
Munir Abbas Building,
4th floor, South Gate, P.O. box 5749, Baghdad;
tel. 880409

Island: Heimilisteaki SF, Saetún 8, Reykjavik;
tel. 24000

Islas Canarias: Philips Ibérica S.A.E.,
Triana 132, Las Palmas, Casilla 39-41,
Santa Cruz de Tenerife

Italia: Philips S.p.A., Sezione S&I/T&M,
Viale Elvezia 2, 20052 Monza (MI); tel. 39-39-36351

Japan: See Nippon

Jordan: See Syria

Kenya: Philips (Kenya) Ltd.,
01 Kalou Road, Industrial Area,
P.O.B. 30554, Nairobi; tel. 254-2-557999

Kuwait: Delegate Office of Philips Industries,
P.O. Box 3801, Safat, Kuwait, tel. 428678

Lebanon: Philips Middle East S.A.R.L.,
P.O. Box 11-670, Beyrouth; tel. 392320/392321

Malaysia: Philips Malaysia Snd Bhd.,
Professional Division,
Lot 2, Jalan 222, Section 14,
P.O. Box 12163, Petaling Jaya,
Selangor; tel. 60-3-562144

México: Philips Mexicana S.A. de C.V.,
Div. Cientifico Industrial, Col. Roma, Durango 167,
Apartado Postal 24–328, Mexico 7 (D.F.);
tel. 52-5-5251540

Morocco: S.A.M.T.E.L., 304-Boulevard Mohammed V,
B.P. 10896, Bandoeng, Casablanca 05;
tel. 212-302992/303192/303050/308051

Nederland: Philips Nederland,
Hoofdgroep PPS, Boschdijk 525, Gebouw VB,
5600 PD Eindhoven, tel. 31-40-793333

Ned. Antillen: Philips Antillana N.V.,
Postbus 3523, Willemstad, Curaçao;
tel. 599-9-615277/612799

New Zealand: Philips Electrical Industries of N.Z. Ltd.,
Scientific and Industrial Equipment Division,
68-86 Jervois Quay, G.P.O. Box 2097,
Wellington; tel. 64-4-735735

Nigeria: Associated Electronic Products (Nigeria) Ltd.,
KM16, Ikorodu Road, Ojota, P.O.B. 1921, Lagos;
tel. 234-1-900160/69

Nippon: NF Trading Co. Ltd.,
Kirimoto Bldg. 11-2,
Tsunashima Higashi 1 - Chome, Kohoku-ku,
Yokohama

Norge: Norsk A.S. Philips,
Dept. Industry and Telecommunication, Sandstuveien 70,
Postboks 1, Manglerud, Oslo 6; tel. 47-2-680200

Oesterreich: Oesterreichische Philips Industrie GmbH,
Abteilung Industrie Elektronik,
Triesterstrasse 64, A1100 Wien;
tel. 43-222-645521/629141

Pakistan: Philips Electrical Co. of Pakistan Ltd.,
El-Markz, M.A. Jinnach Road, P.O.B. 7101,
Karachi 3; tel. 92-21-525171

Paraguay: Philips del Paraguay S.A.,
Av. Artigas 1519,
Casilla de Correo 605, Asunción;
tel. 595-21-291924/291934

Perú: Philips Peruana S.A.,
Av. Alfonso Ugarte 1268, Lima 5,
Apartado Aereo 1841, Lima 100; tel. 51-14-326070

Philippines Philips Industrial Development Inc.,
2246 Pasong Tamo, P.O.B. M.C.C. 911,
Makati, Metro Manila; tel. 63-2-868951/868959

Portugal: Philips Portuguesa S.A.R.L.,
1009 Lisboa Codex, Av. Eng. ° Duarte Pacheco 6, 1000 Lisboa;
tel. 351-1-683121/9
Service Centre:
Servicos Técnicos Profissionais, Outurela/Carnaxide,
2795 Linda-a-Velha, tel. 351-1-2180071

Saoudi Arabia: Delegate Office of Philips Industries,
Sabreen Bldg., Airport Road, P.O. Box 9844,
Riyadh; tel. 966-1-4777808/4778463/4778216/4778335

Schweiz-Suisse-Svizzera: Philips A.G.,
Allmendstrasse 140, Postfach 670, CH-8027 Zürich;
tel. 41-1-4882211/4882629

Singapore: Philips Singapore Private Ltd.,
Lorong 1, Tao Payoh, 1st floor,
P.O. Box 340, Toa Payoh Central Post Office,
Singapore 9131; tel. 65-2538811

South Africa: South African Philips (Pty) Ltd.,
2 Herb Street, New Doornfontein, P.O.B. 7703,
Johannesburg 2000; tel. 27-11-6140411

South-Korea: Philips Electronics (Korea) Ltd.,
G.P.O. Box 3680, Seoul; tel. 794 5011/5

Suomi: Oy Philips AB.,
Kaivokatu 8,
P.O. Box 255,
SF-00101 Helsinki 10; tel. 358-0-17271
Service Centre:
Sinikalliontie 1-3,
P.O. Box 11, SF-02631 Espoo 63;
tel. 358-0-523122

Sverige: Philips Försäljning AB,
Div. Industrielektronik, Tegeluddsvägen 1,
Fack, S11584 Stockholm; tel. 46-8-7821000

Syria. Philips Moyen-Orient S.A.R.L., Rue Fardoss 79,
Immeuble Kassas and Sadate, B.P. 2442, Damas.
tel. 221650/218605/228003/221025

Taiwan: Philips Taiwan Ltd.,
San Min Building, 57-1 Chung Shan North Rd., Sec 2,
P.O. Box 22978, Taipei;
tel. 886-2-5631717

Tanzania: Philips (Tanzania) Ltd.,
T.D.F.L. Building (1st floor), Okio/Upanga Road
P.O. Box. 20104, Dar es Salaam; tel. 29571/4

Thailand: Philips Electrical Co. of Thailand Ltd.,
283 Silom Road, P.O. Box 961, Bangkok 10500;
tel. 66-2-2336330.9/2355665.8

Tunisia: S.T.I.E.T., 32 bis, Rue Ben Ghedhahem,
Tunis; tel. 216-1-248666

Türkiye: Türk Philips Ticaret A.S.,
Inönü Caddesi 78/80
Posta Kutusu 504, Beyoglu,
Istanbul 1; tel. 90-1-1435910

United Arab Emirates: Philips Middle East B.V.,
Dubai International Trade Centre, Level 11,
P.O. Box 2969, Dubai; tel. 475267

United Kingdom: Pye Unicam Ltd., York Street,
Cambridge CB1-2PX; tel. 44-223-358866

Uruguay: Industrias Philips del Uruguay S.A.,
Avda Uruguay 1287, Casilla de Correo 294,
Montevideo; tel. 915641/2/3/4-919009-282808-282809-282811

U.S.A.:
Philips Test and Measuring Instruments Inc.,
California, Garden Grove 92645
12882 Valley View Street, Suite 9;
tel.: (213) 594-8741/(714) 898-5000
California, Milpitas 95035
489 Valley Way;
tel. (408) 946-6722
Florida, Winter Park 32789
1850 Lee Road, Suite 229;
tel. (305) 628-1717
Georgia, Norcross 30071
7094 Peachtree Industrial Blvd., Suite 220;
tel. (404) 586-0238
Illinois, Itasca 60143
500 Park Blvd., Suite 1170;
tel. (312) 773-0616
Massachusetts, Woburn 01801
21 Olympia Avenue;
tel. (617) 935-3972
Minnesota, Minneapolis 55420
7801 Metro Parkway, Suite 109;
tel. (612) 854-2426
New Jersey, Mahwah 07430
85 McKee Drive;
tel. 1-201-5293800, Toll-free 800-6317172

Venezuela: Industrias Venezolanas Philips S.A.,
Av. Diego Cisneros, Edificio Centro Colgate
Apartado Aereo 1167, Caracas 1010-A;
tel. 58-2-2393811/2392222/2393933

Zaire: S.A.M.E./s.a.r.l., 137, Boulevard du 30 juin,
B.P. 16636, Kinshasa;
tel. 31887-31888-31921-32108

Zambia: Philips Electrical Zambia Ltd.,
Mwenbeshi Road, P.O.B. 31878, Lusaka;
tel. 218511/218701

Zimbabwe: Philips Electrical (Pvt) Ltd.,
62 Mutare Road, P.O. Box 994, Harare;
tel. 47211/48031

For information on change of address:
Philips Export B.V.,
Scientific and Industrial Equipment Division,
Test and Measuring Instruments, Building TQ III-4, P.O. Box 218,
5600 MD Eindhoven - The Netherlands
Tel. 31-40-784506

For countries not listed here:
Philips Export B.V., S&I Export,
Test and Measuring Instruments, Building TQIII-3, P.O. Box 218,
5600 MD Eindhoven - The Netherlands,
Tel. 31-40-784650

T&M/840601

www.manualsplus.com
1004758